GCF REGIONAL TUNA PROGRAMME

“Adapting tuna-dependent Pacific Island communities and economies to climate change”

Study 12

Structure of vessel design needs analysis for small-scale fishers operating around FADs

Programme Activity Title:	Design and arrangements for utilization of safer vessels for fishing around coastal fish aggregating devices (FADs)
Recipient Countries:	Cook Islands, Federated States of Micronesia, Fiji, Kiribati*, Marshall Islands. Niue, Nauru, Palau, Papua New Guinea, Samoa, Solomon Islands*, Tonga, Tuvalu*, Vanuatu (* = least developed country)
Designated Counterparts	**Cook Islands** (Climate Change, Cook Islands Division of the Office of the Prime Minister); (Ministry of Marine Resources (MMR)
	Federated States of Micronesia (Department of Finance and Administration); (FSM National Government Department of Resources and Development)
	Fiji (Ministry of Economy); (Ministry of Fisheries)
	Kiribati (Ministry of Finance and Economic Development); (Ministry of Fisheries and Marine Resources Development (MFMRD))
	Marshall Islands (Office of Environmental Planning and Policy Coordination); (Marshall Islands Marine Resources Authority (MIMRA)
	Nauru (Department of Foreign Affairs and Trade); (Ministry of Fisheries)
	Niue (Ministry of Finance); (Department of Agriculture, Forestry and Fisheries (DAFF))
	Palau (Office of the President); (Ministry of Agriculture, Fisheries, and the Environment)
	Papua New Guinea (Climate Change and Development Authority); (Papua New Guinea National Fisheries Authority)
	Samoa (Ministry of Finance); (Ministry of Agriculture and Fisheries (MAF)
	Solomon Islands (Ministry of Environment, Climate Change, Disaster Management and Meteorology); (Ministry of Fisheries and Marine Resources (MFMR))
	Tonga (Ministry for Meteorology, Energy, Information, Disaster Management, Environment, Climate Change and Communications); (Ministry of Agriculture, Food, Forests and Fisheries (MAFF))
	Tuvalu (Government of Tuvalu); (Ministry of Fisheries and Trade)
	Vanuatu (Ministry of Climate Change, Change Adaptation, Meteorology, Geo-Hazards, Environment, Energy and Disaster Management; (Ministry of Agriculture, Livestock, Forestry, Fisheries and Biosecurity (MALFFB))
Expected EOD (Starting Date):	On signing of Funding Agreement between the Program Executing Entity and FAO
Expected Activity Duration	4 years after signing agreement
Total Estimated Budget:	USD 2.2 million (to be finalised in line with funding proposal budget development)

FAO Strategic Framework and the Global Sustainable Development Goals
2030 Agenda and the SDGs are at the centre of the FAO's Strategic Framework 2022 - 2031[1]
Linkages to:

- The framework is anchored in four Aspirations namely better production, better nutrition, a better environment, and a better life.
- FAO is the custodian or contributing Agency contributing to the following SDGs. SDG 1 (No Poverty), SDG 2 (Zero Hunger), SDG 5 (Gender), SDG 6 (Clean Water and Sanitation), SDG 12 (Responsible Production and Consumption), SDG 14 (Life under Water), and SDG 15 (Life on Land).
- This activity explicitly contributes to achieving the sustainable development goals **No. 12 Responsible Consumption and Production, No 13. Climate Action and No. 14 Life Below Water** by supporting investing in transformative and innovative fisheries management, transforming and upgrading fish value chains, and making fish an indispensable component of food security and nutrition strategies.
- This activity addresses climate change and intensification of natural hazards by making agri-food systems more resilient to shocks and climate hazards by reducing the fishing effort on near shore fish resources and on reef ecosystems and by securing longer term food security to hunger, eliminate all forms of malnutrition and maintain these results in the long run.

FAO Programme Priority specifically related to this activity are:

Priority Area	SDG Targets
BP 2 Blue transformation	2.1, 2.2, 14.2, 14.4, 14.6, 14.7, 14.b, 14.c
BP 4 Small-scale producers' equitable access to resources	1.4, 2.3, 2.4, 9.3
BE1: Climate change mitigating and adapted agri-food systems	2.4, 13.1, 13.2, 13.b, 14.3
BE2: Bioeconomy for sustainable food and agriculture	12.2, 12.4, 12.5
BE3: Biodiversity and ecosystem services for food and agriculture	2.5, 14.4

The Green Climate Fund, Conservation International, the Program Executing Entity(ies) and the FAO (Program Implementing Partner) all uniquely contribute to achieving the SGDs. By Joining forces within the framework of the GCF REGIONAL TUNA PROGRAMME the agencies create synergies much greater than their combined individual efforts.

[1] FAO Conference 42nd. Session Strategic Framework 2022 - 2031
https://www.fao.org/3/ne577en/ne577en.pdf

1. Executive Summary

This programme Activity "Design and arrangements for utilization of safer vessels for fishing around coastal fish aggregating devices (FADs)" is an Activity of the larger Green Climate Fund Regional Tuna Programme (GCPRTP). The Activity has a duration of 4 years and an estimated cost of USD 2 200 000 USD.

The main beneficiaries of this activity will be firstly the fishers, fish sellers, their families and communities and governments of Cook Islands, Federated States of Micronesia, Fiji, Kiribati, Marshall Islands, Nieu, Nauru, Palau, Papua New Guinea, Samoa, Solomon Islands, Tonga, Tuvalu, and Vanuatu.

The expected overall Programme Impact is 'Increased food security in Pacific Small Island Developing States'. The Activity Outcome that contributes to Programme Impact, in addition to the other activities of the GCFRTP, is that 'Fishers that fish on anchored FADs (a-FAD) will have access to safe, proven, economically viable and appropriate vessel designs which allow them to fish further offshore and in safer ways'.

In the design of this activity, stakeholder engagement was secured through surveys that were sent to all fourteen countries through SPC and discussions with fishers, fisheries authorities and boat builders in various Pacific SIDS. The key experts on fisheries development in the Pacific were consulted[2]. The results of this study show that to develop safe, economically viable designs for fourteen widely diverse countries, in terms of the variation in their macro-, medium-, and micro-economies, population sizes and geographical isolation, different fishing vessel sizes and characteristics are required to satisfy their specific requirements. No one size fits all.

Based on expert consultations and 6 surveys received from Cook Islands, Federated States of Micronesia, Samoa, Tuvalu, Papua New Guinea and Solomon Islands, this study identified the following critical elements of the Needs Assessment to be undertaken to develop new vessel designs.

- **Suitability of existing designs:** Thorough assessment of the suitability of existing vessels for FAD fishing will need be conducted and the scope for introducing modifications to improve these vessels will need to be evaluated to identify the requirements for new, safer vessels that meet better the FAD fishing operational requirements.
- **Financial viability of vessel operations**: New vessels with different operational capacities may cost more than those currently in use. Although there is a need to design new vessels that perform better further offshore, costs will need to be kept to a minimum given the average earnings of local fishers and the cost-benefit of the new designs will need to be tested thoroughly. In addition, it will be important to understand and make recommendations on different financial tools and instruments (including insurance) to the governments on how fishers can access financial services to purchase the recommended new vessels. Assessment of available finance

[2] See Stakeholder consultation report related to Study 12.

instruments and banking and financing requirements, as well as past present and future government incentives for purchasing safer and more efficient equipment, will also be needed.

- **Technical capacity of boat builders and fishers:** The technical capacity of local boat builders to construct new designs needs to be improved and increased with access to the necessary tools, better materials and better construction methods. For multi-day fishing vessels, the technical capacity of local fishers in sea safety and mechanics will need to be strengthened more than for vessels used for day trips. A capacity needs analysis and development plan will be required.
- **Onshore Infrastructure:** Increased local fish production (and additional landings from purse seiners), will require a better understanding of the operations and aspirations of existing processing and market infrastructure operators. A value-chain approach is needed to ensure that the fish caught from FADs further offshore brings economic benefits to both fisher and buyer. In addition, the availability of mechanics and mechanical workshops and access to spare parts needs to be considered.
- **Safety of fishing operations:** Weather conditions greatly affect safe fishing operations, and climate change adaptation in fishing requires safety improvements in fishing vessels. In several of the participating countries there are no specific regulations for the design, construction and equipment for fishing boats. Safety in fishing operations is an important factor and safety regulations and their implementation needs to be reviewed and/or updated.
- **Fishing operations:** To better understand how improved designs for vessels fishing around FADs will bring safety benefits the operators, it is important to understand how vessels are used presently. In some countries, fishing vessels may have multi-purpose uses such as transport of goods and passengers. The frequency of multi-purpose usage and the carrying capacities has implications for the financial viability and safety of the vessel. In addition, vessels may switch between fishing methods in times when other species are more seasonally available before going back to FADs. A good understanding of the fishing operations, seasonality, and usage must be considered in vessel design. Environmental factors such as the proximity to sea mounts, exposure to high winds and seas are essential considerations in the Needs Analysis.
- **Vessel Size:** The survey results showed a large variation in vessel size preferences among the Pacific Island countries that responded. Further analysis of the vessel usage needs and related dimensions is required in the Needs Analysis to determine the optimal vessel characteristics for fishing operations on offshore FADs.

This document details the design of the Needs Analysis and how the Programme Activity will be implemented.

The overall approach towards new vessel designs is based on the reality that there is no single design likely to fulfill the requirements of all countries. Therefore, a range of vessel designs, which together correspond to the <u>most important and common attributes</u> required by fishers, will be at the center of the theory of change to be considered. In view of this, the key features of the approach to be used for the Activity are:

- To modify traditional vessels used for day trips into slightly larger vessels, which have greater carrying capacity, stability, freeboard, and installed buoyancy and are faster so that they can get offshore and back quickly. Where there is no obvious benefit for modification no changes to vessel design will be proposed.

and

- To develop new fishing vessel designs for multi-day trips, which will be a fully decked boat with fixed fish and ice storage holds to supply urban populations with tuna where small-scale fishers making day trips and the use of bycatch from industrial tuna fishing are not able to meet demand.

To accomplish the above, the naval architect and the fisheries economist will conduct a thorough needs analysis in each country. They will be assisted by national consultants that will be hired to conduct surveys. The results of analysis will provide the most common attributes and specifications of vessels and the country requirements which will be needed to develop new and to modify existing designs. The Needs Analysis will include an assessment of the suitability of the existing vessels used in each country for fishing around FADs. This assessment will include an analysis of technical, socio economic and environmental factors of FAD fishing fleet in each of the countries.

Technical Assessment will include boat building capacity, availability of building materials, engines, tools, repair and haul out facilities, cold chain and ice making and storage.

Socio Economic Assessment will include fisher technical capacity and training opportunities, marketing systems, market volumes, selling prices, outer island transport, roles of island councils and the banking sector in the fishery, overall economic potential of the FAD fishery, fisheries development plans, roles, and involvement of women in FAD fishing.

Environmental Assessment will include oceanographic (currents) and hydrographic and climactic features (seamounts, sea conditions <winds and waves>, SST, seasonality of different fisheries, fisheries management planning and aspirations of the government.

The experts will analyze and integrate the results of the different assessments and synthesize these into a comprehensive overview to determine with a view to determine whether there is a need modification of existing vessels, or larger multi day vessels will be better suited.

Please refer to Annex 1 for more technical details on the assessments.

The objectives of the analyses will be to develop:

- One vessel design layout for daily fishing trips in 3 different lengths
- One vessel design layout for multi day-fishing trips in 3 different lengths

In this way, the countries and fishers would be able to choose between six different vessels sizes to meet their needs. However, to provide designs without proof of concept along with financial viability tests will be insufficient. The implementation strategy is therefore to develop the designs described above, construct two prototype vessels (one for day trips and the other for multi-day trips), and then to conduct full-scale tests of these vessels over 12 months under commercial conditions. The lengths of the two prototypes and the locations of the full-scale tests will be determined through stakeholder workshops and meetings during the implementation of the activity once the thorough needs analysis described above has been completed.

The Activity will be implemented in five phases as summarised below. The details of each phase, together with the expected outcomes, outputs and sub-activities can be found in the work plan and logical framework described in the document.

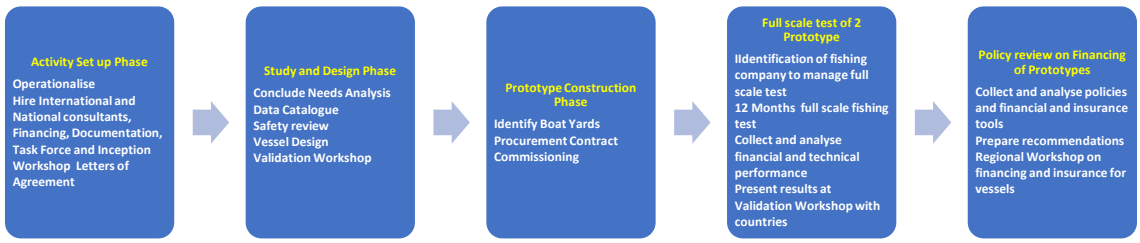

The Programme Activity is structured so that each phase has a distinct Activity Output. However, these are phased and liked into each other contributing to the overall Activity Outcome. The Expected Activity Outputs are listed below:

- Cost effective Activity setup and management.
- Two designs of prototype fishing vessels, each with three different lengths, presented to and accepted by national Fisheries Departments, fishers and boat owners.
- Two prototype fishing vessels constructed in line with international construction and safety standards and guidelines.
- Two new fishing vessel prototypes successfully tested in commercial fishing operations.
- Enabling policy, legislative and financing frameworks for the construction and operations of safe, energy efficient and economically viable fishing vessels for the Pacific Island countries.

Thirty-seven distinct sub-activities will be undertaken to achieve the above-mentioned Activity Outputs. These sub-activities range from conducting studies and consultations with fishers and governments, preparation of six vessel designs and testing of the models in a towing tank, construction of two prototypes based on the designs, as well as training of boat builders.

Cost-benefit analyses for each of the two prototype vessels wil be prepared and recommendations related to the development and implementation of innovative financial

and insurance instruments to assist governments and their fishers to finance the production of vessels based on the prototypes will be made. The cost benefit analyses will be be undertaken by a financial expert, who consults with local banks and government ministries, and will culminate in a regional workshop to present the findings and recommendations on how the appropriate vessels can best be financed by the fishers.

This activity will be implemented by the Food and Agriculture Organization of the United Nations (FAO) on behalf of Conservation International as the Accredited Entity and the Pacific Community (SPC) as the Executing Entity under Component A of the overall Green Climate Fund Regional Tuna Programme.
https://www.greenclimate.fund/document/adapting-tuna-dependent-pacific-island-communities-and-economies-climate-change.

This activity is aligned strategically, technically and synergistically with the development objectives, policies and plans of the 14 participating Pacific Island countries. The activity supports the development and climate adaptation goals of the United Nations Sustainable Development Goals (SDGs), and those of the Green Climate Fund.

TABLE OF CONTENTS

ACRONYMS

Acronym	Meaning
%	Percentage
CI	Conservation International
EEZ	Exclusive Economic Zone
FAD	Fish Aggregating Device
FAO	Food and Agriculture Organization of the United Nations
FSC	Forest Stewardship Council
GCF	Green Climate Fund
GCFRTP	GCF Regional Tuna Program
GCP	Government Cooperative Programme (FAO)
GDP	Gross Domestic Product
GHG	Green House Gas
ILO	International Labour Organization
IMO	International Maritime Organization
IPCC	Intergovernmental Panel on Climate Change
KM^2	Square Kilometres
LTO	Lead Technical Officer (FAO)
a-FADs	Anchored Fish Aggregating Devices
MCS	Monitoring Control and Surveillance
NFI	FAO Fisheries and Aquaculture Division
NFIFO	FAO Fishing technology and operations team (FAO)
PEFC	Programme for the Endorsement of Forest Certification
PIC	Pacific Island Countries
RFB	Regional Fisheries Body
RFMO	Regional Fisheries Management Organization
rPFSC	regional Pacific Food Security Cluster
SAP	Sub Regional Office for the Pacific (FAO)
SDG	Sustainable development goals
SIDS	Small Island Developing States
SPC	South Pacific Community
STCW-F	Standards of Training, Certification, and Watchkeeping Convention - Fishing
TCP	Technical Cooperation Programme (FAO)
UNOCHA	United Nations Office for Humanitarian Affairs
UNOCHA	United Nations
USD	United States Dollar
WCPO	West Central Pacific Ocean

2. General Context

This Programme Activity is one of the components that will be implemented under the framework of the GCF Regional Tuna Program (GCFRTP). The overall objective of the GCFRTP is to provide, knowledge and tools, and support activities and policies for "Adapting tuna-dependent Pacific Island communities and economies to climate change".

This Activity "Structure of vessel design needs analysis for small-scale fishers operating around anchored FADs'" will be implemented by the Food and Agriculture Organization of the United Nations (FAO) during Program implementation and will contribute synergistically to the overall objective and expected results of the GCFRTP.

The GCFTP will be implemented for the benefit of 14 Pacific small island developing states (SIDS). The participating countries are distinct from each other in terms of population size and economies. However, there are communalities such as their small land masses compared to the sizes of their Exclusive Economic Zones (EEZs), their dependence on fisheries and particularly tuna for food security, and the earnings from the sale of industrial fishing access rights.

Table 1 Characteristics of the participating countries, , listed in order of total area of their Exclusive Economic Zones (EEZs).

Country	Population 2022/ % annual growth	Land (Km^2)	EEZ (Km^2)	Coastline (Km)	Per capita GDP USD 2022[2]
Kiribati	122,735 / +1.65	811	3,441,810	1,143	1,632
Micronesia Fed. States	105,987 / +0.22	701	2,996,419	6,112	3,830
Papua New Guinea	9,311,874 / +2.07	462,840	2,400,000	5,152	2915
Marshall Islands	54,446 / -0.13	181	2,131,000	370.4	4,714
Cook Islands	15,406 / +0.42	236	1,977,000	120	14,909
Solomon Islands	744,407 / +2.25	28,230	1,589,477	5,313	2,001
Fiji	901,603 / +0.36	18,333	1,290,000	1,129	5,111

Country	Population 2022/ % annual growth	Land (Km^2)	EEZ (Km^2)	Coastline (Km)	Per capita GDP USD 2022[2]
Tuvalu	10,778 / +0.93	26	719,714	24	5,083
Vanuatu	307,941 / +2.21%	12,281	680,000	2,528	3,223
Tonga	99,283 / -0.25	749	659,558	419	4,952
Nauru	11,928 / +0.81	21	431,000	30	10,020
Niue	1,532 / -1.1	259	390,000	64	19,464
Samoa	200,999 / +0.57	2,834	129,000	403	3,967
Palau	17,976 / +0.11	444	603.987	1,529	13,230

The GCFRTP will be implemented in the Western Central Pacific (Major Fishing Area 71) and has two major components working in tandem as follows:

Component A. Adaptations to harness tuna for food security of Pacific Island communities as coral reefs are degraded by climate change and

Component B. Adaptations to reduce risks to Pacific Island economies of climate-driven redistribution of tuna.

This Programme Activity contributes directly to Component A.

3. Rationale

The national small-scale fishing fleets of Pacific SIDS consist mainly of small outboard-powered skiffs engaging in daily fishing trips. These fleets provide the bulk of the fish and fishery products for national consumption (often from coral reef habitats. As coral reefs continue to decline due to the impacts of climate change, increasing the existing gap in fish supply in many Pacific Island countries due to rapidly-growing populations, small-scale fishers will need to catch more tuna to fill the gap.

Very aware of these impacts and looking into the future, many Pacific SIDS have been making efforts to increase the access of small-scale fishers to tuna and other large pelagic fish by expanding the use of anchored Fish Aggregating Devices (a-FADs) in coastal waters. This adaptation also has the advantage of moving fishing effort away from threatened coral reefs.

It should be noted that these anchored FADs differ significantly from the drifting FADs used by industrial purse-seine vessels operating in the exclusive economic zones of Pacific Island countries (Figure 1).

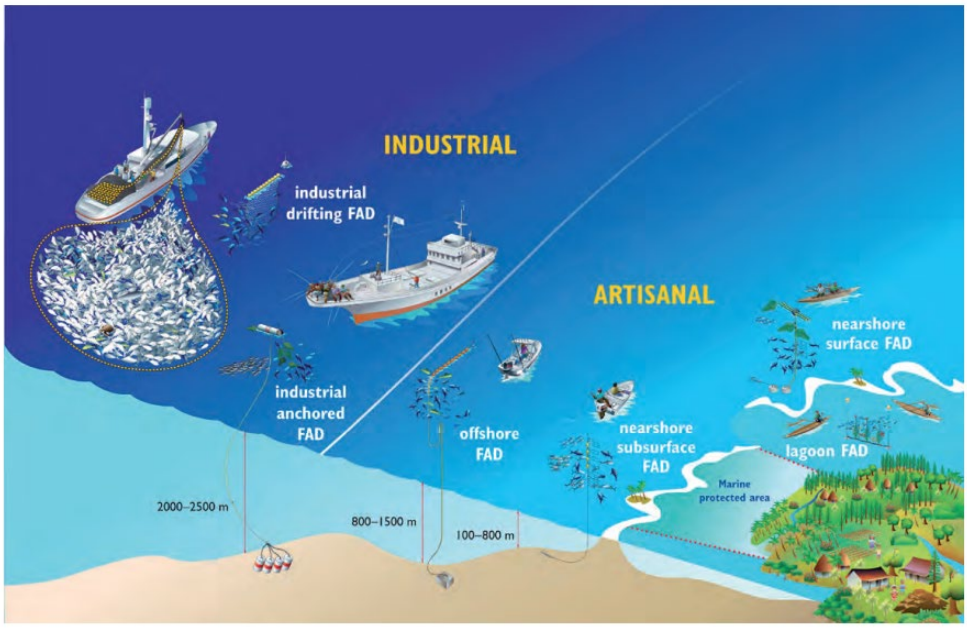

Figure 1 The differences in FADs used by small-scale fishers and by industrial fleets. Source: SPC (2014). Fish aggregating devices. SPC Policy Brief 19/2014

To ensure that existing small-scale fishers already targeting tuna and fishers making the transition from catching fish associated with coral reefs to fishing further offshore for tuna can do so safely, the suitability and safety of the boats currently in use for coastal fishing, typically up to 7 m in length, needs to be fully assessed. These assessments should also evaluate the need for improvements to the design of these boats.

The weather prognosis in the Pacific is for tropical cyclones and weather events to become more frequent and/or more intense due to increased sea surface temperature over the next decades. Fishing around FADs, particularly those that are somewhat distant from shore is expected to become more dangerous (e.g., higher waves, larger swells, more intense storms), increasing the risks of accidents and loss of life at sea. Adapting fishing vessels to the changing ocean conditions will improve safety-at-sea for small-scale fishers as they travel further offshore to catch tuna around FADs. The safety of fishing is discussed in more detail in section 0 Safety of fishing operations.

This activity will contribute to climate change adaptation in the fisheries sector by developing new, safer designs for small fishing vessels suitable for fishing around nearshore and in some cases offshore FADs expected to be placed up to 10 km offshore, preserving the fish that they catch in good condition, and transporting fish caught around outer islands to the urban centres in a manner that is economically viable. It is expected that the introduction and use of these more adequate vessel designs will increase food security and help reduce fishing pressure on over-exploited coral reef fish. Moreover, the vessels will be designed so that they can be built, outfitted, maintained and repaired locally, thereby contributing to employment and self-reliance of Pacific Island communities.

4. FAO Comparative Advantage

This activity will be implemented by the Food and Agriculture organization of the United nations. This Programme Activity contributes to FAO's Strategic Framework 2021-2031 of

- Better Production by preparing and designing fishing vessels that are more stable, safe, suitable for fishing further offshore and which can preserve the catches better.
- Better Nutrition by landing high quality fresh protein to replace imported canned fish and low-quality proteins. Fish has micronutrients which cannot be found in other foods in addition to Omega 3 fatty acids.
- Better Environment by moving fishing effort away from fragile coral reefs which are being degraded by global warming. This will contribute to reef rehabilitation and maintenance of fish biodiversity around the islands.
- Better Life by promoting policies and recommendations related to innovations in safety, finance and insurance instruments to protect investments.

The activity is also in support of FAO's work in adaptation to climate change.

The Fisheries and Aquaculture Division of the Food and Agriculture Organization (FAO) is in the Agency's headquarters on Rome. The FAO has a Sub Regional Office for the Pacific islands (SAP), which was inaugurated in Apia Samoa on 13 May 1996. The SAP office has been responsible for the implementation and coordination of FAO's Program of Work for the last 26 years in the Pacific Region. During this period FAO has worked closely with the Fisheries departments and Ministries responsible for fisheries in the exact same countries where the GCFRTP will be implemented.

Since 2005, the FAO Fisheries and Aquaculture Division (NFI) has been working on fishing vessel design, construction, and equipment with the International Labour Organization (ILO) and the International Maritime Organization (IMO). The three organizations have prepared and published a range of safety and construction Codes, Protocols, Guidelines and Requirements for fishing vessel design, construction, and equipment for various vessel sizes.

FAO has also assisted countries to implement and improve their vessel and safety regulations, with an emphasis on small- and medium sized vessels. In 2012, FAO jointly published Safety Recommendations for Decked Fishing Vessels of Less than 12 meters in Length and Undecked Fishing Vessels [3] (FAO/ILO/IMO). FAO also prepared and published with IMO and ILO, the Code of Safety for Fishermen and Fishing Vessels 2005; both these guidelines are pertinent to this activity as many of the vessels in the Pacific SIDS fall into the categories covered in these publications.

The FAO Fisheries and Aquaculture Division works with the Pacific SIDS on Disaster Risk Reduction and Management, Fisheries Management, Gender Mainstreaming in fisheries, Fish Processing and Marketing, and Safety at Sea. FAO is also implementing the project for "Enhancing livelihoods and food security through nearshore fish aggregating device fisheries in the Pacific" (FishFAD project), which is financed by the Japanese Government in 7 of the

[3] https://www.fao.org/documents/card/en/c/3d78177f-bfeb-5566-ae97-a4cb55984b4f/

GCFRTP participating countries[4]. This FAO activity is assisting the governments to develop their FAD fisheries. FAO brings experience, technically competent personnel, ongoing programs and synergy to the GCFRTP. In addition, FAO Development Law Service (LEGN) is assisting SIDS with fishing safety legislation.

Table 2 FAO Synergy activities in Pacific SIDS 2022

Country	Activity Name	Outputs
Fiji, Kiribati, Marshall Islands, Palau, Samoa, Tuvalu, Vanuatu	Enhancing livelihoods and food security through nearshore fish aggregating device fisheries in the Pacific GCP/SAP/002/JPN	Strengthening and developing community nearshore FAD programmes to provide improved access to high value species; Structuring and strengthening of fishers' associations and cooperatives; Developing livelihood opportunities and revenue generating activities and products; and Improving safety at sea for fishers of nearshore fish aggregation devices
Fiji Solomon Islands Vanuatu	Strengthening Small-scale fisheries in the Pacific GCP/SAP/003/CAN	Strengthened national and local management capacity in small-scale fisheries for climate change adaptation through a gender-sensitive approach. National and local actors are better prepared for natural disasters and climate change impacts, resulting in reduced vulnerability. Resilient fisheries value chains developed that reduce vulnerability of fishers and women in coastal communities to climate related changes, extreme events and other economic, social and environmental shocks
Fiji Federates States of Micronesia Niue Palau Solomon Islands	Reducing COVID-19 Related Food Insecurity in the Pacific Region GCP /SAP/004/CAN	Enhanced COVID-19 impact analysis, including rapid gender analysis to identify gender gaps, to inform gender-sensitive national and regional response plans, strategies, policies and actions. The rapid gender analysis will build on existing FAO country gender assessments in participating countries.

[4] Fiji, Kiribati, Marshall Islands, Palau, Samoa, Tuvalu, Vanuatu.

		Strengthened household gender-sensitive agriculture production and resources management for more resilient to disasters in the selected countries. Strengthened national and regional coordination on gender-sensitive food security and agriculture in the Pacific.
Fiji	Building resilience in Fiji's fisheries sector through improved DRR and DRM TCP/FIJ/3801	Fisheries focused disaster risk reduction (DRR) and Management Plan Drafted/Prepared Relevant government staff and selected fishers acquire new skills in boat repair, engine maintenance and participate in improving local boat design. Prepare a Disaster Risk Reduction and Management Plan Develop adaptive fisheries and aquaculture management plan. Safer, more stable, and fuel-efficient boat design with greater carrying capacity prepared and presented to Ministry of Fisheries
PACIFIC SIDS	Pacific Regional Food Security Cluster	Support Pacific SIDS in disaster risk reduction (DRR) and disaster risk management (DRM) Support to National Food Security Clusters, Response to crises, mobilise funding in disasters, humanitarian coordination between UN-OCHA, World Food Programme (WFP) and FAO.
Vanuatu	Building resilience in Vanuatu`s small-scale fisheries sector through improved vessel designs TCP/VAN/3901	To enhance the capacity of Vanuatu's small-scale fisheries with safer and more productive small-scale fishing vessels.
Fiji Samoa Tonga	Seafood risk management and awareness raising on	To strengthen national capacities to identify and address the risk of ciguatera poisoning

	practices to minimize risk of ciguatera poisoning. TCP/SAP/3807	
Cook Islands Fiji Marshall Islands Micronesia, Federated States of Palau Samoa Solomon Islands Tuvalu Vanuatu	Mapping and characterization of Fishers and Fisher Workers Organizations in selected PICs, Phase II of TCP/SAP/3710 TCP/SAP/3901	To map fisherfolk organizations and understand their level of functionality and support needs
Marshall Islands	Intra-ACP Blue Growth program for Sustainable Fisheries and Aquaculture Value Chains Productivity and Competitiveness (FISH4ACP)" GCP/GLO/028/EC	The overall objective of the activity is to contribute to poverty reduction, jobs creation, food and nutrition security by improving the economic, social and environmental sustainability of fisheries and aquaculture value chains in ACP countries.

FAO together with World Food Program are the lead agencies in the regional Pacific Food Security Cluster (rPFSC). Since this activity has implications for food security, the rPFSC will support the programme activity through information and knowledge sharing and training. It will also assist with strengthening the national food security clusters.

In summary, the comparative advantages of FAO for executing this activity include its authority and status as a global intergovernmental organization, the FAO membership of the Pacific region countries and network with regional partners, the unparalleled information source and institutional memory FAO has on the subject of fishing vessel design, the decentralized office with its professional staff in fisheries supported by a multidisciplinary team, its ongoing technical programme supporting fisheries in the region, and its capacity to respond to unforeseen needs of member countries in the Pacific. Moreover, as an UN agency, FAO applies responsible financial and administrative management.

5. Needs analysis requirements

In this section we discuss the needs analysis and the implications that must be addressed to introduce new vessels designs to ensure that small scale a-FAD fishers will have safer, more reliable and productive fishing operations that are environmentally sustainable and financially viable.

The successful introduction and use of safer and financially viable new vessels are dependent on a suite of enabling policies, regulations, and financing mechanisms. Furthermore, it requires not just documentation but strong commitments to implement the policies and new

regulations and financing particularly for larger vessels. Improvements are needed in fisheries management to register and monitor the impact of the new designs, financial tools and insurance policies will be important for the private sector to acquire boats; crews and boat builders will have to upgrade their skills; and infrastructure in cold chain will be required to prevent spoilage and waste.

Not all the problems in this analysis will be addressed by the activity. Many of the requirements will have to be addressed by the governments of the participating countries once the policies have been geared to introduction of the new designs. However, the activity will carry out studies that can support better and more informed decision making on fisheries and fishing fleet development. For example the activity will study various innovative financing mechanism for fishers to acquire/finance vessels but the activity will not provide vessels for fishers. The activity will, however, build two prototypes and test these as proof of concept and carryout the financial viability studies under commercial conditions.

5.1 Financial viability

New vessel designs that enable fishers to operate further away from shore and most possibly for longer periods will inevitably cost more. This is because it makes little sense to build a bigger boat that can fish further but it fishes the same number of days as a smaller boat.

To cover the investment and financing costs (boat, engine, and gear) of a larger boat, it will be necessary to catch more fish, sell the fish at a higher price or both. However, given the limited spending power of the populations, increasing prices is probably not the best strategy. **To better understand the financial viability of fishing operations over several days with boats of larger capacity there will be need for cost-benefit and techno-economic fleet performance studies, and full-scale testing of prototype vessels. These prototypes should be developed after preliminary cost benefit analyses have been completed.**

Commercial banks have been quite averse to giving loans to fishers and if they do, the costs for down payments, guarantors and collateral to cover the loan are usually beyond the scope of many small-scale fishers. This leaves the options, that future fishing boats are financed by private businessmen, or that special policies and mechanisms related to financing are put in place to facilitate small- scale fishers obtaining these boats. **There will therefore be a need to provide targeted assistance to develop a financial and insurance services for fishers.**

5.2 Training and capacity building

Fishers in many of the participating countries are adept in daily fishing operations of small plywood skiffs powered by outboard engines. However, the operation of vessels capable of fishing further offshore and on multi day trips will require upgrading local fisher skills in navigation, seamanship/boat handling meteorology, safety at sea, marine engineering, fishing methods, planning and organization, preservation of fish, legal aspects, and financial management. Without these enhanced skills, the operation of new vessel designs, particularly multi day designs will be inefficient and could lead to low or negative financial viability. The use of new multi day designs of vessels will have to be accompanied by proper training and capacity building accompanied by regulations related to certification of Masters, Engineers,

and Deck personnel**.** There are 11 maritime training schools in the 14 participating countries, which could facilitate such training and certification.

Boat builders in many of the countries are constrained by the lack of tools and boat building materials which all must all be imported. The quality of these materials and tools is often of low and supplies are infrequent. In addition, boat building skills are varied from very good to poor and methods from cheap to expensive. **The activity will develop and implement a training plan for boat builders. The number of boat builders and type of training will have to be determined once the preliminary studies are completed to identify the skill requirements. ~~A lumpsum amount will be budgeted to start the process.~~**

5.3 Infrastructure

5.3.1 Volume of fish, cold-chain, and transport

Presently fish that is landed daily by small vessels is sold almost immediately. For large catches, the fish is stored in insulated fish boxes in ice. When vessels stay out to sea for multiday voyages, the catches will be larger in volume. Fish that is not sold on the day that it is landed will have to be stored in ice, possibly for several days and in some cases the catch will have to be transported to a fish storage facility. This presents a challenge in terms of costs of electricity to produce ice and cold chain as well as transport costs (insulated trucks or vans). Depending on the market absorption capacity, investments in cold chain will be required. **Investments in infrastructure will be required based on the studies about the aspirations and market fish absorption capacity in each country. Relevant studies will have to be carried out. Opportunities to sell fish to established exporters, if there is over production may be relevant in some countries where processing plants and mechanisms to export are already taking place. These countries include Fiji, Kiribati, Papua New Guinea, Samoa, Solomon Islands, Tonga and Vanuatu.**

5.3.2 Haul out, workshop, repair facilities

- Presently boats are hauled onto the beach for repair and maintenance. Haul out is easily done on small vessels. However, larger vessels would require, boat ramps, trailers, vehicles to haul the vessels up ramps or may require slipways or cranes. These facilities come at a cost and are only economically viable once there are sufficient vessels that warrant such investments. It will therefore be necessary to carefully consider the number, types and sizes of vessels and the market in each country. **Investments in infrastructure will be required based on the studies about the aspirations and market fish absorption capacity in each country.**
- All vessels require maintenance and repairs. Proper repairs on engines and boats require, workshops, tools, boat hardware and spare parts. It will be necessary to improve workshops, tooling and mechanisms to acquire spare parts. **The size and investment in workshops will be proportional to the type and number of vessels targeted by the government's policies. Many countries already have mechanics and workshops. Most likely there will be need for upgrading of some of these facilities. This programme activity will not be upgrading infrastructure facilities. However, the activity will identify the details needs and requirement by country where necessary.**

5.4 Fisheries and Fleet Management

At present the management of small-scale fishing is done through fisheries laws and regulations which are focused on biological conservation of the marine ecosystems. The introduction of new vessels capable of fishing further offshore introduces a new paradigm. Some of the SIDS have little or no experience managing these types and sizes of vessels. The strengths of the fisheries departments of Pacific SIDS are in the management of high seas vessels, licensing, inspections and application of international and regional frameworks and agreements mainly through the WCPFC.

The introduction of new designs or vessels will require additional layers of Monitoring, Control and Surveillance (MCS) as well as pertinent regulations and inspection protocols related to safety for the type, design, construction, equipment and autonomy of vessels, fisheries regulations specific to FADs and offshore fishing, and development planning for the future of the fleet**. The fisheries and safety regulations for each country will have to be reviewed and updated to address the greater number of small-scale fishers targeting tuna and the need for these fishers to use new, safer vessel designs. It should be noted that regulations without related awareness-raising and support for implementation are usually ineffective. Already, the FAO's Development Law Service is currently assisting countries in updating their safety regulations.**

Due to the diverse nature of the countries participating in this activity, it is envisaged that most of the above issues raised in the needs analysis will have to be tackled at the country level and not at the regional level. **The needs analysis points out that the introduction of new vessel designs will require accompanying measures in terms of investments, policies, studies, and regulations to successfully support m-FAD fisheries development.**

6. Technical analysis of present vessels

The following is an analysis of the vessels presently being used in Pacific SIDS. During the preparation of this document, the main stakeholders were requested to complete a survey designed to provide technical information on the vessels that exist, discover gaps in information, and to design a future looking adaptation activity based on existing and past technical information.

6.1 Demography, economics, location, and designs

The great diversity and differences between the participating countries in terms of populations size, Gross Domestic Product (GDP), location of markets, EEZ area is evident from Table 1. These factors influence the size of the economy and the market, which in turn dictates the number of vessels and fishers required to supply tuna for domestic consumption, the supporting policies and the fisheries annual budgets needed by the fisheries agencies. To cover the wide range of social, cultural and market conditions across the region, several vessel designs are likely to be needed to meet the diverse needs of the participating countries.

6.2 Summary of survey results

The following is a summary of the survey results (See Annex VIII). The survey showed the following:

- The countries that reported all have more than 20 FADs installed.
- Except Samoa, boatbuilders did not receive any training in building techniques,
- The average vessel length and breadth of a-FAD fishing boats is 8 meters and 2 meters respectively.
- All boats use Yamaha outboard engines between 15 and 60 HP.
- Most respondents though that the optimum size of vessel was between 8-10 meters except Samoa who proposed 12-14 meters this is because of the widespread use of the Alia and longlines as a main gear.
- Except for FSM which imports all boats, all reporting countries built their own boats out of plywood or planks.
- Four of the six countries that responded had boat building companies and individual boat builders. One country did not have any boatbuilders as all boats were imported and another had individual boat builders only .
- At Programme activity start up, the survey will be updated, and the remaining countries' inputs will be solicited.

7. Technical, social, and economic considerations related to the construction of new FAD fishing vessel designs

Given the diversity of contexts in which small-scale fishing for tuna occurs across the region, and the wide range of existing small vessels, an in-depth 'needs analysis' for improving the design and availability of safer vessels for small-scale tuna fishing is needed. This analysis will examine options for modifying existing vessels to improve their safety where needed and where practical to do so. It may well be that in some countries there is little or no need for improved vessel design because the boats currently in use are fit for purpose, e.g., where well-designed aluminium or fiberglass boats are imported from overseas. However, it is anticipated that improved designs, or modifications to existing designs are likely to be needed in the majority of the 14 participating countries. In countries where it is determined that new vessel designs are needed, the analysis will not only investigate the technical aspects of vessel design but also the social, marketing, and financial arrangements needed to support the introduction and adoption of new vessel designs. The various aspects to be considered related to construction of new vessel designs are summarized below (see also Annex I for detailed technical guidance).

7.1 *Boat construction materials*

7.1.1 Quality of material

All participating countries will import some or all their boat construction materials. These will include but are not limited to wooden planks, plywood, nails, screws, bolts, nuts, washers,

paints, glues, resins, and epoxies. These materials are widely available at varying prices and quality. It is important not to sacrifice quality for price as this affects the longevity and frequency of repairs. All timber should meet local and global certification for sustainability (PEFC, FSC, etc.)

7.1.2 Material dimensions (scantlings)

Incorrect scantlings make the boats, weak, requiring frequent repairs or make the boat too heavy with excessive fuel consumption and too heavy to be manually hauled out of the water necessitating a slip way (Annex I). It is essential to have the correct scantlings to achieve load paths, no hard spots, continuity and alignment of structural elements.

7.1 3 Construction methods

In addition to the quality of the materials, the correct techniques for cutting, shaping, curing, clamping, laminating, drying, fastening, painting, launching are important and application of incorrect processes and methods will make the vessel weak even though the materials are of good quality and the scantlings correct.

Decisions will have to be made related to the choice between fiberglass and wooden plank and plywood and fibreglass covered wood and aluminium. Skills to work with new materials need to be developed and sheds and storage facilities may be needed depending on the construction.

7.2 Weather and Sea State

Fishing vessel should be constructed to withstand the weather and sea states in the sea areas accessed by fishers. Length, breadth, draught, hull form adequate freeboard, stability, and scantlings are the most important parameters to integrate into the design. It is important to establish the wave heights, wind speeds, ocean currents and the seasons when the largest waves and winds are most prevalent[5].

The warming climate is affecting the sea state and the prognosis is that in the Pacific is that cyclones with higher intensities can be expected in the future.

The consequence of fishing further offshore with larger waves and risks of more intense weather is that the construction of fishing vessels will have to compensate for adverse weather by increasing the length, breadth, draught, buoyancy and robustness.

7.3 Safety of fishing operations

Fishing is one of the most hazardous occupations and, globally many fishers are injured or die at work. Estimating fatalities in fisheries is challenging for many reasons. Estimates made by FAO and ILO (24,000 fatalities annually), ILO, 80 deaths per 100,000 on fishing vessels over 24

[5] FAO will enter into an agreement with the European Space Agency (ESA) in 2023 under which FAO will obtain for free satellite data on ocean currents, surface water temperature and wave height. This may be useful for weather index/parametric insurance of fisheries, as well as for trip/voyage planning.

meters, in a recent paper published in "Triggering Death[6]" in November 2022 by FISH Safety Foundation estimated find fatalities among fishing communities worldwide surpass 100,000 annually. The estimations are illusive because of different methodologies used, differences in reporting requirements and legal obligations.

A study[7] on deaths at sea in Pacific Islands from the Asia Pacific Sustainable Development Journal (Vol 26, No. 2 Page 107). The study found that *"The quality of death registration data in Pacific island countries and territories remains suboptimal. Data on deaths occurring at sea are especially limited"*. The study did three case studies on deaths at sea in Fiji, Kiribati, Tuvalu. The data analysed by the study covered the period 2008 -2017. The researchers found that *"between 2008 and 2017, 58 deaths at sea in Fiji, 81 deaths at sea in Kiribati, and seven deaths at sea in Tuvalu were identified from the data sources collated (table 3). The numbers fluctuated annually, reflecting variations in the frequency and severity of sea accidents. Based on these numbers, the average unadjusted mortality over the 2008-2017 period was 7.5 deaths per 100,000 in Kiribati and 17.6 per 100,000 in Tuvalu and 0.8 per 100,000 population in Fiji*. *The researchers concluded that "Data on deaths at sea in the three study countries are fragmented among multiple sources. The majority of reported deaths include no information on age. Data on small vessels involvement is also limited. These factors hamper measurement of the true burden of all at-sea mortality and limit inferences about risk groups".* A following table shows a summary of the data deaths in the case studies.

[6]Triggering Death FISH Safety Foundation November 2022 Internet:

https://go.fishsafety.org/downloads/White%20Paper%20-%20Triggering%20Death%20-%20November%202022.pdf

[7] DEATHS AT SEA IN THE PACIFIC ISLANDS: CHALLENGES AND OPPORTUNITIES FOR CIVIL REGISTRATION AND VITAL STATISTICS SYSTEMS. Carah Figueroa, Gloria Mathenge, Christine Linhart and Philip A.S. James* https://www.unescap.org/sites/default/files/Paper%205.pdf

Table 3. Reported deaths at sea in study countries, by age, sex, and source, 2008-2017

Variable	Fiji	Kiribati	Tuvalu
Age (years)[a]			
<10	5	18	..
10-29	5	5	..
30-49	7	4	..
>50	6	3	..
Unknown	35	51	..
Sex			
Men	24	34	7
Women	6	11	—
Unknown	28	36	—
Source[b]			
Police	50	14	..
News media	36	17	..
Health	..	35	7
Civil registry	..	17	7
Total	**58**	**81**	**7**

Notes: [a] Only six reported deaths in Tuvalu had data on age. Due to small numbers, age disaggregated data are not provided.

[b] Based on news sources, 13 reported deaths at sea in Fiji were related to small vessel activities. News sources also indicated five deaths at sea in Fiji being reported to the health facility. Information linking small-vessel activity to the deaths could not be ascertained from the other sources in all study countries. Data from the Ministry of Health and Civil Registration Office in Fiji were not available at the time of the study.

Most small scale fishers in Pacific SIDS are usually poor and food insecure due to seasonality of fishing, lack of fish preservation equipment, fluctuation market conditions and purchasing power of the populations. The loss of life of a fisher deals a heavy blow to the income, livelihoods food security of the family.

Not only are deaths devastating but, accidents at sea and natural disasters which cause loss of assets (boat, engine and equipment) and injuries causing loss of limb or handicap also weigh heavy on the fisher families' livelihoods and their futures.

The fourteen countries participating in this activity have varying levels, from none to comprehensive, of safety regulations related to design, construction and equipment of small scale fishing vessels. For example, in built buoyancy to ensure that boats will not sink if flooded is not a common requirement. Vessels are constructed according to traditional methods and in many cases inspections are not required or not carried out systematically during construction to ensure buoyancy and strength of the vessels to withstand the expected sea conditions.

Safety inspections for life saving equipment may be carried out consistently, randomly or not at all. Similarly, the carriage of safety equipment on board, as well as operator qualifications may or may not be required by different countries. Usually, the requirements are assessed by the countries based on how fishing operations evolve over time. One such case happened during expansion of the 'alia' small boat fishery in Samoa, when the fishermen ventured far offshore to fish for albacore with longlines, rather than for the deep-water snapper for which the original alia design was intended. The change in the use of the boats resulted accidents and loss of life. Several of these accidents are thought to have been due to modifications to the original alia design, reducing the seaworthiness and stability of the vessels when loaded in rough sea conditions[8]. Samoa has now changed its regulations and all crew must undergo safety at sea training before embarking.

Over the last 20 years or more, SPC, FAO and Pacific Island Governments have provided training in safety at sea and more recently grab bags with survival equipment to fishers. FAD fishers have benefitted from these interventions. However, safety culture still needs significant work to improve safe working conditions on board fishing vessels. Many of the countries have accident reporting systems, however, only a percentage of losses are reported and particularly when there are deaths or missing for days or weeks or mobilization of search and rescue operations. Many incidents such as capsize, swamping, engine breakdown and rescue by other fishers are not reported to the authorities, making statistical analysis difficult. In addition, accident reporting terminology is not standardized across the region. Understanding the causes of accidents is the first steps in mitigating them. Lack of accident data is an obstacle to understanding.

Many SIDS use sea transport to move people, goods and fish between outer islands and main urban centres. However, appropriate vessels are frequently not available or inadequate for the tasks of transporting and maintaining the cold chain from outer islands to urban centres. Consideration also needs to be given to assessing national needs for vessels suitable for multi-day trips to deliver tuna caught around a-FADs installed at outer islands to urban centres, and to people transport requirements (as necessary).

A programme activity Study 3 related to development of FAD fisheries will conduct training in safety at sea and provision of equipment under the GCFRTP.

[8] https://coastfish.spc.int/News/Fish_News/84/Fish_News_84.pdf

(see pages 24 and 25)

This activity will work in synergy with the Study 3 and conduct a complete review of the national legal frameworks for safety of fishing vessels and provide recommendations for governments to implement to ensure the safety of the fishers and their investments.

To ensure that fishing operations are safe and less people are injured or die its essential that the authorities responsible for maritime safety have at their disposal, and enforce, rules and regulations. It is also imperative that fishers are knowledgeable and competent in seamanship and certified if possible. Owners and operators should know the laws and regulations and should comply.

FAO/ILO and IMO have developed the Safety Recommendations for decked vessels and less than 12 meters in length and undecked fishing vessels. In Pacific SIDS where no rules and regulations exist, the FAO/ILO/IMO Safety recommendations should be applied until such time as a country develops its own rules and regulations. In the implementation of this activity the FAO/ILO/IMO safety recommendations will be applied to the design, construction and equipment of vessels built under this activity. Naval Architect Daniel Davy contributed to this document and his report relating to Safety at Sea including the draft catalogue can be found in Annex I.

Appropriate formulation and application of national safety regulations will increase safety, protect fishers, reduce accidents, lower loss of property, increase confidence of financial and insurance institutions to provide loans and coverage and professionalize the small-scale fisheries for tuna. On the other hand, owners may well incur additional costs in complying with regulations, in terms of acquiring and servicing of safety and communications equipment, inspections, training for crews, and maintenance and repairs. However, regulations without implementation are not worthwhile.

7.4 Competence of crews

The quality and efficient operation of fishing boats are linked to the competence of the crew. The best equipped boat will not catch fish, navigate safely and be free of break downs without a competent crew. Many SIDS have competent day fishers that operate skiffs with outboard engines, however, crews taking boats to sea on multiday trips or operating a considerable distance offshore will require additional training and certification. Crews whether going to sea on daily or multi day trips should receive training in safety and seamanship. The International Convention on Standards of Training, Certification and Watchkeeping for Fishing Vessel Personnel (STCW-F), was adopted by IMO in 1995, sets certification and minimum training requirements for crews of seagoing fishing vessels with the aim to promote the safety of life at sea and the protection of the marine environment, considering the unique nature of the fishing industry and the working environment on fishing vessels.

There are maritime training schools in Cook Islands, Federated States of Micronesia, Fiji, Kiribati, Marshall Islands, Papua New Guinea, Samoa, Solomon Islands, Tonga, Tuvalu, and Vanuatu. However, the courses offered are those required under the IMO STCW Convention (1978), which mainly target training of seamen for the merchant marine. These existing schools will have a part to play in providing training for fishing skippers and engineers and can do so relatively easily by adding the basic STCW-F courses to their curriculum and/or alternatively use training package on fishing safety subjects developed by FAO . The latter is

highly suitable for small-scale fishers and can easily be integrated into vocational school training programs for fishers.

7.5 Boatyards and workshops

7.5.1 Boat Yard

Larger vessels built to withstand larger seas will have to be hauled out of the water every 12 to 18 months for cleaning the hull and inspecting, repairing or replacing underwater gear (rudder, propeller, skeg, struts, anodes, shaft bearings and thru-hull fittings). Since it is not possible to have a boat yard in every landing site, the harbour where there are the largest number of boats is usually the location of the boat yard.

Smaller boats are usually hauled up the beach on wooden rollers manually or by a mechanical winch or hauled out of the water by a trailer on a concrete ramp. The method depends on the number of persons that live at the site and the size of the boats.

7.5.2 Workshops

All boats, no matter what size, require a covered boat shed and mechanical and woodworking workshop with appropriate tools, spare parts, and materials to carry out repairs to the hulls and engines. Finally, well trained boat builders and mechanics are essential to keep the fleet afloat and fishing.

As boats move further offshore to fish there will be a need for haul out and workshop facilities. These will be investments that will have to be made but will only be viable if there are a certain number of boats that can keep the boat yard and workshops financially viable.

7.6 Electrification of boats

As boats fish further offshore it would become necessary to stay out to sea longer at night. This will require lights for safety and for working on the deck and even attracting bait fish. Boats that fish on daily operations do not need lights except for an emergency torch light in case they come back late.

Both outboard and inboard engines can generate electricity to charge DC batteries which in turn provide electricity for navigation and deck lights and communications and electronic navigation GPS and sounders for finding FADs and fish. Solar panels will keep batteries charged without the need for running the engines. A combination of engine and solar generated electricity to charge batteries will be important for vessels that fish further offshore.

7.7 Daily vs. Multi-day fishing

The space requirements on board a fishing boat increases dramatically when comparing daily to multi-day fishing. With multi day fishing there is greater need for space for fuel, water, oil and lubricants, spare fishing gear, bait storage, fish and ice storage, boat equipment, safety and communications equipment, bunks for resting, storage for food and space for cooking and toilet facilities as well as tools and engine and deck equipment spare parts. For daily fishing trips, these needs for space are greatly reduced or not required. The size of the boat increases exponentially when changing from daily to multi-day fishing. The 2007 ILO Work in

Fishing Convention (C188) is the key international legal instrument establishing minimum standards for working and living conditions on board fishing vessels. It entered into force in 2017 and is gaining importance internationally. It would be important that multi-day fishing boats are designed to meet the minimum standards of this convention.

7.7.1 Fish carrying capacity

The vessel design should start with a calculation of the optimum fish hold capacity. The optimum size of the fish hold is the volume of space needed to carry the quantity of fish and ice, that, when the fish is sold will be able to pay all the fixed and variable costs and provide a profit for the owner. The net profit margins of fishing vessel operations by the new fishing vessels should be higher than 10 percent and the return on fixed tangible assets (ROFTA) and the return on investment (ROI) should also be above 10 percent to make sure that investment in the new vessels will be attractive. The fish hold capacity is determined after a cost benefit analysis and techno-economic performance review of the current fishing vessel operations.

7.7.2 Optimum fit for purpose

- The decision between multi-day and daily fishing will depend on the following factors:
- Distance to the offshore a-FADs and reliable access to fish within range of operation of vessel.
- Sea state in the offshore operating area and the amount of time that there are adverse conditions.
- Volume of the market and buying power of the population.
- Onshore storage and fish preservation facilities.
- Cultural acceptance to leave families and go to sea for multi-day fishing and whether the financial compensation is sufficient to encourage shifting from daily to multi-day.
- The difference in income between daily and multi-day offshore fishing.
- Using boats designed for daily fishing without modification to fish offshore exponentially increases safety risks.

7.7.3 Fishing gear and deck equipment

During the development of this document exchanges of emails and meetings were held with William Sokimi (SPC Master Fisherman), Ian Bertrand (SPC Coastal Fisheries Expert) and Michael Savins (FAO Chief Technical Adviser for the FishFAD activity). These discussions centred around fishing strategies of Pacific fishermen i.e. how do they cope with seasonality and adjust their fishing gears and operations to make the most of their fishing efforts. It was agreed by all that due to variability of tunas in their waters and the distribution and numbers of FADs that fishers will have to diversify their gears. FAD fishing is only one of the fishing methods that fishers use in their strategies to cope with seasonality, therefore, to maximise the profitability and diversity, new vessel designs should consider the following technical recommendations.

- Fishing strategies include seasonality, weather conditions, market considerations, target species, and access to fishing grounds.

- Fishers take into consideration many different methods and the activity needs to consider adapting the different methods according to seasonal changes, weather conditions and marketing.
- The design of any boat should consider incorporating the following gears to be used in addition to fishing around FADs.
    - Vertical longlines
    - Chumming / Palu Ahi
    - Trolling
    - Light fishing for small pelagic which can be used as bait
    - Deep water reels for deep bottom and midwater fishing.
    - Squid fishing jigging for diamond back and loligo squid
    - Live bait fishing
    - Pole & line / Dangler fishing
    - Not mentioned in the discussion
- "trap fishing" for deep demersal snapper, shrimps, and lobsters
- Very shallow light weight long lines
- Flying fish fishing using lights and scoop nets or gillnets as used in Tuvalu and Kiribati
- To accomplish the above, the multi-day boats need to have:
    - Available electrical or hydraulic power for reels, and other hauling equipment
    - Electrical power for running air pumps to keep bait alive.
    - Water pump capability for pole and line or dangler spray system
    - Power for lights to attract bait and other pelagic fish.
    - Hydraulic power for more powerful applications
    - Use of solar panels to charge batteries for communications, lighting, and safety.
    - Outrigger for trolling
- In addition, where applicable for boats less than 9 m in length, boats need to have emergency sail mechanisms to get to shore in case of engine failure. The sail and mast should be light and not an encumbrance, there is need for steering and leeboard.
- Installing twin inboard diesel engines for boats > 9 m should be considered. In case of engine problems, the second engine can bring the boat home. Also, one of the engines can be used to power fishing accessories such as hydraulic and water pumps.

7.8 Financial viability of vessels

Not only must fishing vessels be built of good quality materials using proper methods, appropriately sized for the weather conditions, have sufficient carrying capacity, count on good shore-based infrastructure, have navigation and safety equipment and operated by competent crews, but they must also be financially viable, covering all variable and fixed costs and turn a profit. The FAO has developed a methodology to assess the techno-economic performance of fishing vessels worldwide, which is being applied by many countries. The methodology has been discussed at an expert meeting held in India in 2019 (see report), validated in 2020 by FAO, (see technical paper). The methodology includes an analysis of costs and earnings structures, capital investments, technological state, and uses a range of financial and economic performance indicators. The methodology will be applied also in this activity, to assess scope for performance improvement.

Fishing trials with prototypes for small-scale fishing have been carried out in the Pacific previously. In Kiribati trials were carried out on a monohull, a catamaran and a trimaran to conduct longline fishing. In Western Samoa, the 12-meter Super Alia was tested with promising results. Unfortunately, none of these designs and their full-scale tests were continued after the trial period and none were scaled-up.

In Kiribati, a workshop and analytical report of a consultancy carried out by Master Fisherman David Itano and Economist Ray Greer recommended a modified skiff and a 15-meter monohull as possible designs to overcome the shortcomings in the designs tested in Kiribati. No construction of any 12-meter Super Alia took place after the trials carried out by William Sokimi; this was because the operators of Alias surmised that the Super Alia investment costs were too high for the fishery. This activity will apply and build on the lessons learnt from the Kiribati and Samoa experiences and will come up with six different options from which operators may choose to suit their financial situation and experiences.

7.9 Summary of technical, social, and economic considerations and recommendations

1. To provide the fish needed for domestic food security of growing Pacific Island populations in the face of continued degradation of coral reefs due to climate change, it will be necessary to fish further offshore around anchored FADs. A thorough assessment is needed of the suitability of existing vessels for this purpose, the scope for modifying the existing vessels to improve their suitability, and the need for new safer and more economically efficient vessels.
2. Based on preliminary analyses and expert knowledge of the region, it is evident that new designs are likely to be needed in several countries. , Two options for new vessel designs are proposed as follows:
    - Modify the designs of fishing vessel used for day trips into slightly larger vessels, which have greater carrying capacity, stability, freeboard, and installed buoyancy and are faster so that they can get offshore and back quickly and,
    - Develop new fishing vessel designs for multi-day trips, which will be a fully decked boat with fixed fish and ice storage holds to supply urban populations with tuna where small-scale fishers and the use of bycatch from industrial tuna fishing are not able to meet demand.

Due to the great diversity in the demographics, economies, and cultures of the participating countries, there is no single design is likely to fulfill the requirements of all countries. Instead, a range of vessel designs is needed which together correspond to the most important and common attributes required by Pacific SIDS fishers.

To overcome the challenges of economic viability, distance to fishing grounds, culture needs, economies of scale and access to finance, the following are proposed:

- One vessel design layout for daily trips in 3 different lengths
- One vessel design layout for multi day fishing trips in 3 different lengths

In this way, the countries and fishers would be able to choose between six different vessels sizes to meet their needs.

A key objective of this activity is to provide governments with the designs of safer vessels and cost / maintenance information so that they can seek bilateral support to provide the vessels needed to fish around nearshore and offshore FADs.

The lengths of the two prototypes and the locations of the full-scale tests will be determined during the implementation of the activity once the range of studies described above have been completed.

8. Feasibility

This section details the feasibility of implementing the activity from a technical and administrative point of view. It delves into the risk analysis and the management arrangements envisaged to achieve the results, considering stakeholder engagement, staffing, budget, and Terms of Reference.

8.1 Implementation Arrangements

8.1.1. Institutional Framework and Coordination

Conservation International (CI) is an Accredited Entity has prepared the Funding Proposal for the GCF regional tuna programme "Adapting tuna-dependent Pacific Island communities and economies to climate change". This activity is a sub-activity of the overall GCFRTP. CI is responsible for the oversight of implementation of the GCFRTP and its sub-components. The management of the Programme will be the responsibility of the Executing Entity(ies).

FAO has been chosen as a partner to implement the vessel design activity, because of its long history and competence in fishing vessel design. The governments of the 14 participating countries in this activity are key partners and will provide overall governance and guidance, during implementation of the activity and sub activities.

The FAO Lead Technical Officer (LTO), SAP Fisheries and Aquaculture Officer, the CI Program Coordinator, SPC delegate to the GCFRTP and the GCF representative will meet on a regular basis, at least every 6 months, or *Ad Hoc* (as needed) to discuss progress on activity implementation.

The FAO through the activity Lead Consultant will organize regular coordination, information and guidance meetings and workshops with participating country focal points. The focal points will transmit the information and meeting documents to update their respective Ministers and Ministries.

The FAO as the main implementing partner for this activity will closely coordinate with CI and SPC, and participate in high level meetings, such as the SPC Heads of Fisheries Meetings, the Forum Fisheries Agency and WCPFC or other meetings, as appropriate where the progress and

results of the activity is required to be presented to a wide high level regional audience. In most of these forums, FAO already has observer status, and is invited frequently, which also facilitates the coordination with the organizers of the meetings.

The FAO, in close coordination with CI and SPC will organize formal decision-making and guidance meetings and workshops to validate designs and adjust activity implementation timelines as required, and if necessary. FAO will also participate in CI hosted annual GCFRTP meetings.

8.1.2 Government Inputs

The activity participating governments have already assigned fisheries officers as focal points to the GCFRTP. These officers would be responsible for coordinating and implementing the sub activities in their countries.

Participating Governments will provide up-to-date information and data on their a-FAD fisheries as well as local access and transport to ports, landing sites and infrastructure to FAO international and national consultants. Where feasible, Governments can provide a working space for the staff and consultants of the FAO.

8.1.3 Activity Implementation Strategy

Five international technical consultants and 14 national consultants will be hired to implement the activity. Their Terms of Reference along with their terms of tenure are in Section 11 of this document. The consultants envisaged are as follows:
1 Lead Consultant/Economist
1 Fisheries Finance/Insurance Expert
1 Naval Architect
1 Master Fishermen
1 Maritime Lawyer/Safety Specialist
14 National consultants

FAO will also support the activity with in-house technical, operational and administrative assistance, which will be provided by the Subregional Office for the Pacific (SAP) and FAO headquarters. A part-time operations assistant will be hired by SAP to support the activity implementation, with a focus on arranging contracts and assisting with procurement matters.

Overall, the activity is set to be implemented in different phases with each subsequent phase building on the results of the preceding phase. A list of the contracts that will be signed is in Annex VI.

- The phases are as follows:

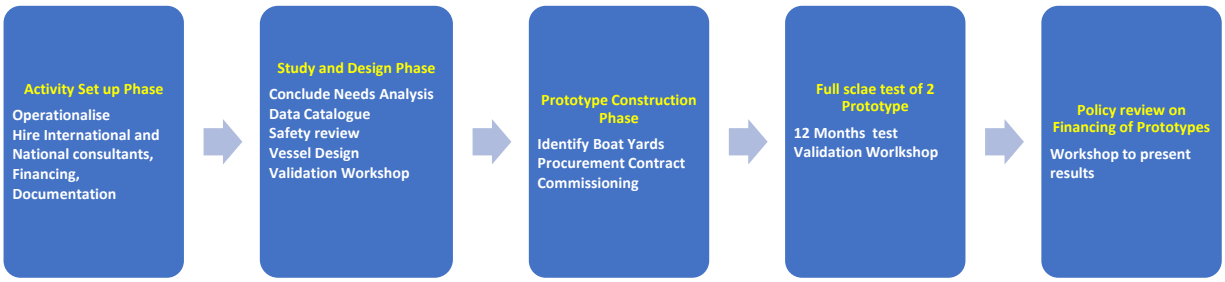

8.1.3.1 Phase 1 Implementation - Set Up

Upon signing the agreement with Executing Entity for the implementation of this activity, FAO will immediately set the activity in the FAO systems and begin the recruitment of the Lead Consultant/Economist, subsequently national consultants and key international consultants will also be hired. (See ToRs in Annex IX) Simultaneously, FAO will set up an internal taskforce to guide and monitor the activity progress to ensure adequate coordination and technical oversight. The first taskforce meeting will be held during this phase. FAO will also set up the operating base for the activity at its sub-regional office in Apia and prepare Letters of Agreement with each participating country to implement and facilitate wide participation in virtual meetings as well as physical attendance to two regional meetings planned during the activity lifespan. An inception workshop will also be held to plan the activities in accordance with the final approved budget.

8.1.3.2 Phase 2 Implementation - Study and design

This phase of the activity is focused on conducting detailed studies related to the development of two new boat designs - one for a multi-day boat and the other for a day boat. The designs will be prepared by a naval architect, models of the boats will be tested in a towing tank to establish correct stability, seakeeping behaviour, power needs and other criteria revealed during the study phase. Once these parameters have been optimised, the naval architect will prepare three different vessel lengths for each of the two designs. Making six designs overall. A regional workshop will be organized to present the designs and, if needed, integrate any modifications requested by the countries into the design specifications. It is anticipated that about 30 fishers, government and private sector representatives, and the banking sector will participate in this virtual regional meeting to comment on and validate the designs.

8.1.3.3 Phase 3 Implementation - Prototype construction

Phase 3 will be directed to the construction of one of the multi-day fishing boats, and one of the day fishing boats. These boats will be built by established boat-building companies in the region. The naval architect and one regional master fisherman will inspect the vessels during their construction to ensure that they will are built according to the specifications. To facilitate training of boat builders from participating countries, the activity will pay the costs to send up to 14 boat builders (1 from each country) to participate in construction of the vessels in the country of construction for a period of 30 days. This will allow boat builders from Pacific SIDS to exchange ideas, learn from each other, and garner new techniques.

It is envisaged that the boats will be constructed in the same country. The selection of the country will be based on the technical capacity, boat building experience and pricing of the

construction, as well as the logistics involved. Preferably, the full-scale tests of the boat will take place in the same country to avoid the shipping costs to other countries. Once the vessels have been built, they will undergo sea trials before acceptance of delivery. A step-by-step guide and video will be prepared to record the construction process and technical details.

8.1.3.4 Phase 4 Implementation – Full scale test of 2 prototype vessels

Activities in Phase 4 will start during the implementation of Phase 3. This is needed to prepare all the equipment and contracting for the full-scale testing before the vessels are completed. It is anticipated that fishing companies based in the Pacific will manage and implement the full-scale trial of the two boats. The boats will not be given to individual fishermen. A "lease" type contract agreement will be made whereby the vessels are commercially fished and all the financial data and fish catches are recorded and a full report written, like the work done by SPC on the full-scale tests of the Super Alia in Samoa. Except that the test period will be 12 months. The Master Fisherman hired by the activity will monitor the trials and go to sea with the vessel as per the work plan. At the end of the trial, the catch data and vessel technical performance data will be prepared, analysed and presented to the countries at a virtual regional workshop.

8.1.3.5 Phase 5 Implementation

This phase will start during Phase 4 and focuses on financial, insurance tools and policies for financing and acquisition of new vessel designs as well as safety at sea improvements. This phase is crucial without the enabling instruments the new designs may not be easily acquired. Therefore, the activity will conduct a supply/demand assessment for financial and insurance services, and review the available tools and financing instruments, terms and conditions of loans, government plans, past and ongoing loan schemes and overall study of financial and insurance services provision to the fisheries sectors in most activity countries.

National consultants will be hired to collect the information (10 days each country). A finance and Insurance expert will analyse the information obtained from national consultants and prepare a report and presentation of the findings with recommendations including potential innovations to existing credit schemes and insurance products that have worked in other countries. The activity will organize a regional fisheries finance, investment and insurance workshop with Pacific SIDS to present and discuss the findings of the various studies. A key result will be a policy statement that Fisheries Departments may use to promote an enabling environment for finance and insurance products appropriate to Pacific SIDS. Finance service providers and insurers will be invited to participate in the information collection, analysis and workshop.

A maritime safety lawyer will be contracted to carry out a thorough review of existing (fishing) vessel safety regulations and prepare draft generic safety regulations for small fishing vessels that fish offshore on a-FADs. Participating countries can modify the generic regulations according to their requirements.

The details of activities of each phase can be found in the Logical Framework Annex II, Beneficiary Analysis Annex III, Activity Work Plan in Annex IV, and the proposed budget in Annex V.

During the implementation of the activity, there will be meetings and workshops to present the results of the designs, construction process, full-scale sea trials and policy discussions. As it is very expensive to organize face to face meeting with focal points and other stakeholders, it is envisaged that most meetings will be held virtually or in hybrid mode. At least two regional meetings will be held in person. Letters of Agreement will be prepared with each country for organizing the participation of local stakeholders and for organizing their travels to the regional meetings.

8.1.4 Activity oversight and responsibility during implementation

The overall responsibility for the successful implementation of this activity under the GCFRTP is The FAO Sub Regional Representative (SRR) who represents the Director General of FAO in the Pacific. FAO's Sub Regional Office (SAP) is in Apia, Samoa. The SRR is the budget holder of this activity and has full mandate to oversee and manage FAO's programme in the Pacific.

The Lead Technical Officer (LTO) of this activity will be provided by the Fishing Technology and Operations Team (NFIFO) in FAO Headquarters in Rome, Italy. The LTO will be technically supported by the sub-regional fisheries and aquaculture officer at the SAP office, as well as fisheries legislation officer of FAO's Development Law Service (LEGN), and a fisheries safety officer of NFIFO.

The SAP fisheries and aquaculture officer, who is responsible for management and development of FAO's fisheries programme in the Pacific, will ensure consistency of the activity with the programme and linkages with other ongoing and planned projects of FAO and partner organizations in the region. The LTO provides the overall technical oversight of the activity, consultants and ensures that the activity results are technically sound and meet international and FAO quality standards.

The NFIFO LTO and fishing safety officer will provide technical expertise on safety at sea, vessel design, equipment, construction, liaison with IMO and ILO on safety of fishing vessels, techno-economic performance review of fishing vessels, as well as fisheries finance and insurance support services. The LTO will also be responsible for the quality of the publications produced under this activity by consultants, as per normal course of his/her duties.

8.1 5 Management, Support and Operational Arrangements

The SRR is supported by program, procurement, human resources, program, operational and administrative staff at the SAP office in Apia. The activity introduces additional workload on the SAP staff and it is anticipated that funding will be required for an operations officer on a 10% basis to support the activity. This is included in the activity budget.

The activity will be Direct Implementation by FAO. All recruitments and procurements will be in accordance with FAO Manual Sections, rules and procedures, which are consistent with UN-wide established practices.

8.1.6 Risk Management

It is well recognized that there are wide geographical, demographic, social and cultural diversities in all the participating countries. The activity will share experiences and contribute to knowledge generation and management.

This activity aspires to develop 2 vessel designs and to build 2 only small vessels and conduct the full-scale fishing trials. The vessels will be designed and constructed under supervision of FAO technical staff, they will be safe, stable, and culturally acceptable and built under the safety recommendations developed by the FAO/ILO/IMO. They will be equipped with safety equipment and gears and operated by skilled and experienced skippers and crew during the 12-month trials. Given that commercial fishing is among the most dangerous occupations, and many accidents and fatalities happen in fishing operations, the strict adherence to safety recommendations and standards will be ensured. As needed, safety training will be provided for by the activity. Vessel and crew insurance services will be arranged for by FAO for the duration of the fishing trials.

Moreover, during vessel construction safety standards will be applied and safety gears will be used (e.g., protective clothing, glasses, gloves) to reduce chances of accidents. The boat yard contracted for the construction will be obliged to have adequate accident insurance cover.

In terms of environmental impact of the activity on fisheries resources, the vessels would fish for a period of 12 months and the volume of fish caught by the two vessels will not have any significant impact on the overall fish resources in the region. On the contrary, once the vessel designs are made available to the governments and other stakeholders and several boats are built in a country, a reduction of pressure on coral reef fish resources is expected, together with safer fishing operations. Small-scale fishers will increase the food security of their communities, adapt to climate change and contribute to mitigating climate change impacts.

The following risks have been identified with the scaling up of new vessel prototypes for fishing offshore:

Non or only partial technical acceptance of the new designs by governments and fishers due to wide financial, cultural, demographic, social and geographic diversity amongst participating countries. Low uptake of designs by the fishers.
Lack of trained qualified personnel for multi day vessels
Multi day designs not culturally acceptable
Reluctance to finance new designs as these were not tested in every in a particular country
Insufficient a-FADS installed in deep waters
Natural disasters or human error destroy prototypes and or interrupt fishing trials
Resurgence of COVID-19 or other Pandemics
Weak stakeholder engagement by some governments and fishers

The risk matrix in Annex VII proposes several mitigations from each of the above-mentioned risks. In addition, the mitigation owners are identified in the Matrix. There are some risks out of control of the activity such as the resurgence of a pandemic, some mitigations have been inserted as well.

9. ANNEXES

ANNEX I Report of Naval Architect for the development of Study 12, 'Structure of vessel design Needs Analysis for small-scale fishers operating around FADs'

Daniel Davy – Consultant Naval Architect
20 March 2023

Consultants Deliverables:

A. Preparation of the draft design format of catalogue of the motorised vessels currently used by small-scale FAD and other tuna fisheries in each of the participating countries.

B. Elements related to comprehensive technical assessments of the suitability of vessels used by small-scale fishers in each country.

C. Elements related to laws and regulations related to safety in the design, construction, and equipment of small fishing vessels.

D. Elements related to electrification of small vessels.

E. Elements related to IT tools for review of safety aspects to be included in the databases.

Introduction:

This report supports the preparation of the Study 12 document and provides inputs regarding the technical elements which relate to vessel design, operation and safety.

There are a wide variety of small-scale fishing vessels across the 14 Pacific Small Island Developing States (SIDS). The design and operation of these vessels varies according to location but there are technical elements which are common across all vessel types and designs. This report identifies these elements and describes their function and importance.
Future small-scale vessels will be required to operate safely and effectively around a-FADs, which may be a significant distance from shore. Many current designs are unlikely to be suitable for such operation regarding vessel and crew safety.
In order to understand current vessel designs and their suitability for extended fishing operations vessel surveys will need to be undertaken in each location. A draft format for a catalogue of information for motorised vessels used by small-scale FAD is included here.

Part A

Draft design format for catalogue of the motorised vessels

The elements of the catalogue are drawn from the consultant's experience in the study and design of small fishing vessels, typically under 12m in length. The sections itemised are based on the typical breakdown of the specification of a fishing vessel, and in particular the type of vessel under consideration in this study.
The draft catalogue is presented in Appendix A.

Part B

Elements related to technical assessment of suitability of vessels.

B1. General considerations

Fishing vessels operate in a wide range of sea areas and weather conditions and it is imperative that vessels are designed and built to operate safely in the worst conditions anticipated. In some cases the area of operation permitted by the Competent Authority is limited by the vessel's design, equipment and safety features. For example: "vessels working further than 12 nm from shore should carry a spare outboard motor…"

B2. Materials and strength

Fishing vessel should be constructed to suit weather and sea states in the sea areas – categories as defined by marine authorities – accessed by fishers. The construction should be by a proven method and make use of materials suitable for the marine environment. The dimensions of the material components (the scantlings) should be sized according to proven experience and/or regulatory requirements. Factors to consider include: vessel operating speed, type of engine and its horsepower, vessel weight, the weather, sea state and loads imposed on the hull and deck.

For strength and longevity the details of construction are important. This includes the scantlings, such as thickness and dimensions of components that make up the boat and the correct arrangement of the connections and fastenings that hold the materials together.
The weight of construction plays a part in the strength of the vessel but a heavy vessel may be difficult to haul out of the water. The availability of shipyard/workshop facilities will be important depending on the size and weight of the boat.

B3. Freeboard and stability

These factors are vital in the vessel's ability to withstand the actions of wind and waves at sea. Freeboard is the distance from waterline to the deck edge or gunwale if undecked. Low freeboard reduces the vessel's ability to keep water off the deck or out of the boat, this increases the possibility of swamping or capsize. Regulations often set limits on the minimum freeboard required, these vary but are generally in the region of 200 to 400 mm.

Stability is the ability of a vessel to withstand the heeling forces which arise from loads on board or the action of wind and sea. In addition, the location of the loads affects stability and in particular the heights of loads onboard, for example, heavy nets or fish boxes on the deck. Knowledge of the centre of gravity (C of G) of each load is very important.

During a fishing trip the stability and freeboard of the vessel change according to the loads on board and their position and it is important to be aware of how stability could change and anticipate the worst-case scenario. Typical load cases include: depart port with full fuel and stores, no fish; at fishing ground with full catch of fish; depart fishing ground with full catch and low fuel & stores.

Meeting stability requirements is complex and requires computer analysis, however, this is often not required for vessels under 12m in length. The situation will vary across different national marine authorities. Simplified stability assessment methods, suitable for <12m vessels, are available in various documents. The most basic are a rolling test and a heeling test, these are easy to conduct alongside a quay.

To improve stability various actions can be taken such as keeping loads low in the hull, including fuel tanks, fish/ice holds and taking care how fishing gear is loaded.

An additional factor related to stability is seaworthiness, this is the vessels response to wind and waves in terms of motions, this is important for crew safety whilst working. In many cases this capacity is achieved by vessel evolution over time and the experience of builders. New vessel designs should reflect good practice in this area. Testing of vessels to improve seakeeping can be achieved by model scale tests or using specialist software, then comparisons between old designs to new could be made.

In all discussions about the safety of the vessel's hull, watertight integrity must be considered. This is the ability of a vessel to keep water out of the hull, this is different for decked and un-decked designs. Decked vessels need a watertight deck and hatches and openings which are protected from water ingress. Un-decked designs need to have flotation or buoyancy spaces, these need to be either air/watertight or spaces filled with buoyant materials. All small vessels should be able to remain afloat when swamped, in this way they become a kind of life raft.

B4. Machinery

For most fishing vessels a motor or engine is the primary means of propulsion, using petrol or diesel fuel. This machinery fulfils the obvious task of moving the vessel in all anticipated sea states but also plays a significant role in safety – it can position the vessel for fishing operations, resist waves and get the vessel out of trouble, for example, on a lee shore.

Machinery should be installed correctly and fixed to adequately strong structural elements. Throughout the machinery's life it will need frequent maintenance and repair, this is ideally carried out at port but the fishers should anticipate that work and repairs may be needed at sea. Tools and spares should be carried on board.

Where vessels using outboard motors are undertaking longer trips or multi-day trips vessels should carry a spare or second motor which is well maintained and in good condition. This may be a smaller 'get-you-home motor' or a second motor of the same power as the main motor. With some maritime authorities taking a second motor to sea is required where the trip planned is over a certain distance, for example 20 nm from shore.

B5. Crew protection

Working on the deck can be dangerous and suitable safety features should be included to reduce the occurrence of injury or accidents to the crew. Features to be incorporated may include: bulwarks and/or railings of a sufficient height; handrails and grips; protection around moving parts and ropes and cables (although these are inevitably part of the vessels equipment).

In addition, various items of safety equipment for crews should be onboard according to distance offshore, including:

- Life raft
- Buoyant apparatus
- Lifejackets
- Lifebuoys
- Distress signals: 4 parachute rockets
- Distress signals: 2 handheld flares
- Capsize rope Whistle, mirror, and torch.

B6. Fishing operations

As discussed above fishing is dangerous and working on deck is full of hazards. Safe fishing operations rely on several factors, including: adequate training for crews; the skill and experience of crews; the layout of the deck and the safety features of the gear used. Familiarity with the vessel is important as this assists avoiding hazards. An example might be accidentally stepping inside a loop of warp which will endanger the crew. Overall, the layout and gear should be neat, logical and as crew friendly as possible.

B7. Navigation and communications

Vessels departing on fishing trips should have the ability to know their location and to be able to communicate with other vessels or a shore station.
Traditionally, fishers know their location by long experience and by sight of known features. However, where trips are made beyond known features and sight, then a better method is required, generally a GPS.

Communication methods are also necessary where longer trips are made. The simplest form is making a mobile phone call; however, this can be limited by range of signal and battery charging. When relying on the use of a mobile phone for communication, a method of charging the phone or carrying spare batteries is essential. For greater coverage, a VHF radio should be carried, again there are some difficulties relating to signal range and charging/batteries. In some States there may be a system of radio base stations on shore, with signal repeaters, which can increase transmission range. If not, vessels may be able to form a chain of communications to request assistance.

The range of a VHF radio is limited and perhaps no more than line of sight. The height of the transmitting and receiving aerials is significant - the higher the better. Range may be extended

by a chain of vessel-to-vessel communications and where available land-based repeater stations.

B8. Crew accommodation

A vessel which is at sea for multi day trips will need to have suitable accommodation for the crew including cooking, sleeping and toilet facilities. On smaller vessels with limited space this can be difficult to achieve, however, consideration must be given to these items.

Part C

Elements related to laws and regulations related to safety of vessels.

C1. General

Fishing is considered one of the most hazardous occupations and many fishers are injured or die at sea because they work, many of these work on small vessels and can face dangerous conditions. To ensure that fishers work in a safe environment and operate vessels in safe manner it is essential that there are national rules and regulations which address the risks, and that these are enforced.

"Safety First" should be the ethos for all persons working on fishing vessels. In all events, safety must be given top priority. Most important: The vessel should remain afloat in all conditions or carry a buoyant apparatus. The vessel should have a means of emergency propulsion. And there should be some means of communication on the vessel. Proper safety measures will save lives, protect vessels from damage, prevent serious accidents and injuries, protect the environment, and contribute to profitable fisheries.

C2. Regulatory requirements

To make these regulations effective a registry of vessels and licences should be in operation. Vessels may be categorised to ensure regulations are applicable, categories include length, tonnage, engine power and other methods. Such categories may limit the area of operation for a vessel, including distance from safe haven, seasonal weather and other factors. A vessel category may also link to the required equipment to be carried, such as life jackets, buoyant apparatus, lifebuoy, flares, communications, navigation, radio, spare parts etc.

Before a new vessel is built it is useful to have a process for approval of the design and review of the drawings, in particular the construction. When the vessel is complete and equipped, a final inspection may be conducted by a competent authority before the vessel is approved to go to sea. It is important that the vessel is also registered and in some circumstances insurance could also be important.

To maintain the safety regime there is generally regular surveys covering the vessels integrity and the gear and equipment required. These surveys should cover the care, repair and maintenance of the vessel structure, and awareness of worn and damaged parts of the vessel. Checks of the presence onboard of required equipment are also undertaken including safety

items and their function, such as pumps, radios etc. This work should be carried out by the relevant competent authority.

It may be that the hardest part of the regulation of fishing activities is building understanding and cooperation with the boatbuilders, operators and owners, and working together with them to implement the regulatory requirements. (There is no point in having a set of regulations which remains on the shelf!)

C3. Crew experience and training

For safe operation, documentation of the crews' training, experience and formal qualifications should be in place. In some cases, such qualifications affect the allowable vessel size which can operate and the areas of fishing permitted. Some marine authorities offer or encourage access to training courses to increase skills in the fishing fleet.

Part of the crews' work should be the care and repair of all parts the vessel and its equipment, this should be done regularly. This may require materials and spare parts which will need to be carried on board. A major component of a safe vessel is a well-maintained means of propulsion, generally an inboard or outboard motor. If a motor fails to function the crew and the vessel could be in a dangerous situation. Crews may also need training regarding fire safety and emergency procedures including managing a damaged, swamped or capsized vessel. Training on the IMO Colregs[9] will also be required in some countries, to know the rules of the road at sea.[10]

Training for crews of larger (>24m) fishing vessels may result from the International Convention on Standards of Training, Certification and Watchkeeping for Fishing Vessel Personnel (STCW-F)[11]. Such trainees may find work on large or small vessels and in some cases training for small vessel crews may also be available.

Subjects covered could include:

- Understanding stability
- Fire safety, use of appliances
- Crew protection
- Lifesaving appliances
- Emergency procedures
- Radio communications, use of equipment
- Navigational equipment, use of equipment

Part D

<u>Elements related to electrification of small vessels</u>

[9] https://www.imo.org/en/About/Conventions/Pages/COLREG.aspx

[10] The FAO eLearning course on the rules of the road at sea for small-scale fishers is available here in various languages: https://elearning.fao.org/course/view.php?id=704

[11] https://www.imo.org/en/ourwork/humanelement/pages/stcw-f-convention.aspx

D1. General

The availability of stored electricity and, if possible, a means of its generation onboard is essential for both working on deck and for safety at sea. The key elements are communication, navigation and lights. These elements are part of the safety equipment and will save lives.

D2. Electric energy, generation and storage

Most electrical equipment on small vessels is DC (direct current) and not AC (alternating current) so this will be the requirement. How is the electrical energy generated? This can be achieved in several ways generally: alternators, solar panels, wind turbines or generators (fixed or portable), or a combination of sources.

Any engine which has an electric start is likely to have the capacity to generate electricity via stator or alternator (which includes a voltage regulator rectifier). Many outboard motors are fitted with an alternator which does not require a rectifier.
Solar panels are becoming cheaper and easier to install where facilities are off grid. These systems are small scale and found on small homes, vans, schools etc. For example, a 1.6m^2, solar panel could produce around 0.37 kWp** which can charge two 12V, 110Ah batteries. Navigation lights on a small boat might draw around 30W and a VHF radio could also be used for emergencies.

(Note** kWp stands for kilowatt 'peak' power output of a system)
The energy generated needs to be stored in batteries with sufficient capacity so that consumers can be powered when generating is not occurring. Often, service batteries and engine starting batteries are separate units.

D3. Use of electric energy

Communication on board is essential on longer trips. This allows contact with other vessels whereby information about sea state, weather and fishing can be shared. And in case of an emergency at sea, effective communication can improve safety allowing messages to be passed regarding the position of the affected vessel and the nature of the problem. Ultimately a rescue may be possible.

In addition, the position of the vessel needs to be known, many seafarers use local knowledge or dead reckoning to do this, but increasingly using GPS.

Lighting on board is also essential on longer trips. International regulations (IMO Colregs) require the use of fixed navigation lights on the vessel. For safe working on deck at night, the vessel will need sufficient lights to illuminate the working areas. Lighting reliant on burning oil or gas should not be used.

Emergency lights including search lights and torches should be supported by charging onboard. As should the charging of mobile phones and other devices. See next section.

Part E

<u>Elements related to IT tools for safety</u>

Information technology and digital systems can contribute to safety at sea as well as enhancing and monitoring fishing activities. Even small vessels can be fitted with tracking/vessel monitoring systems (VMS) to transmit the location of vessels. Electronic catch reporting tools could be valuable to both authorities and other stakeholders. The basic components for some systems are illustrated below:

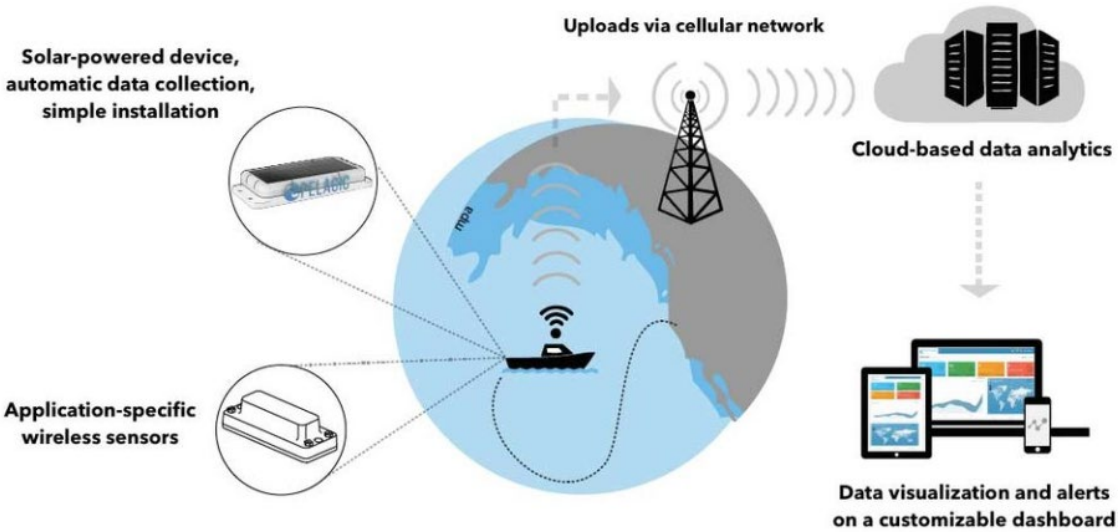

Such systems are compact, easy to install in small vessels and can be solar powered. They can make use of cellular data networks and provide records and positions frequently, perhaps hourly.

To achieve this, the vessel would need to have a reliable power source, a tracking device (AIS), a GPS and a mobile phone or VHF. A tablet or similar device would be needed for data entry, note that some AIS units can, with WiFi & Bluetooth connectivity, stream AIS data to smartphones and tablets onboard.

Fisheries authorities could record the movement of fishing vessels and establish databases for future monitoring and potentially control access to certain areas (marine conservation zones

etc). Recording the species caught can assist fishers to better locate valuable fishing resources, evaluate fishing effort, and enhance safety at sea.

An AIS system like the illustration below can provide the tracking requirements but also enhance safety of the crew and vessel. For example, impending bad weather, calling for assistance in case of accident or loss of power and man overboard locating etc.

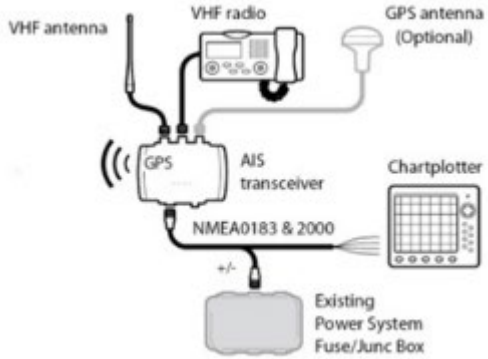

Such systems could be relatively inexpensive, perhaps $200 to $500.

Appendix A

Draft format catalogue of information for motorised vessels used by small-scale FAD and other tuna fisheries in each of the participating countries.

Section 1 – General	
Country	
Local Region	
Vessel type	
Vessel local name/ type	

Photograph 1		
Photograph 2		

Section 2 – Vessel type		
TYPE	ANSWER & COMMENTS	NOTES
Mono hull		
Catamaran		
Proa/ Outrigger		
Trimaran		
Other		
V bottom hull		
Flat bottom hull		
Round bottom hull		
Buoyancy provided		To ensure vessel unsinkable
Foam material		
Closed airtight spaces		
Other material		Plastic bottles, floats
Open (no deck)		
Partial deck		
Fully decked		
Normal duration of fishing trip. Hours or days		
Number of crew		
Shelter or small cabin		Less than standing height
Full cabin		Sufficient standing height
Cooking arrangements		
Sleeping arrangements		
Washing and toilet arrangements		

Section 3 – Vessel dimensions		
ITEM	ANSWER & COMMENTS	NOTES
Length, max, m		See section 4
Length, on waterline, m		
Beam, max, m		As above
Depth, m		Keel to edge of deck at middle of boat
CUBIC number		See section 6
Ice box fitted		
Ice box capacity		Weight or volume
Fish box/ storage fitted		Dimensions
Insulation used		

Section 4 – Measure open vessels

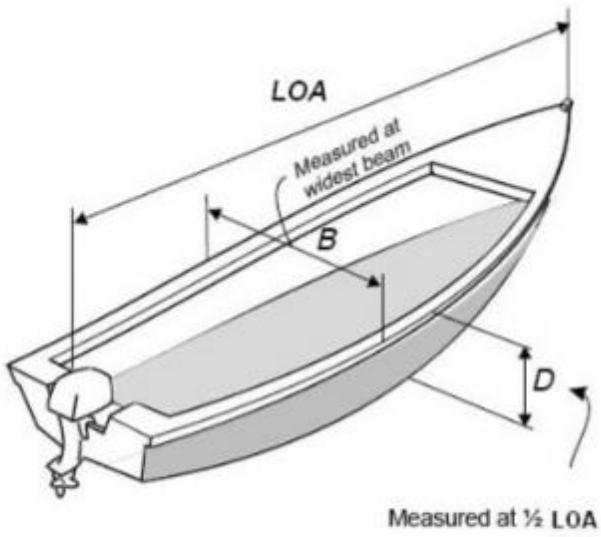

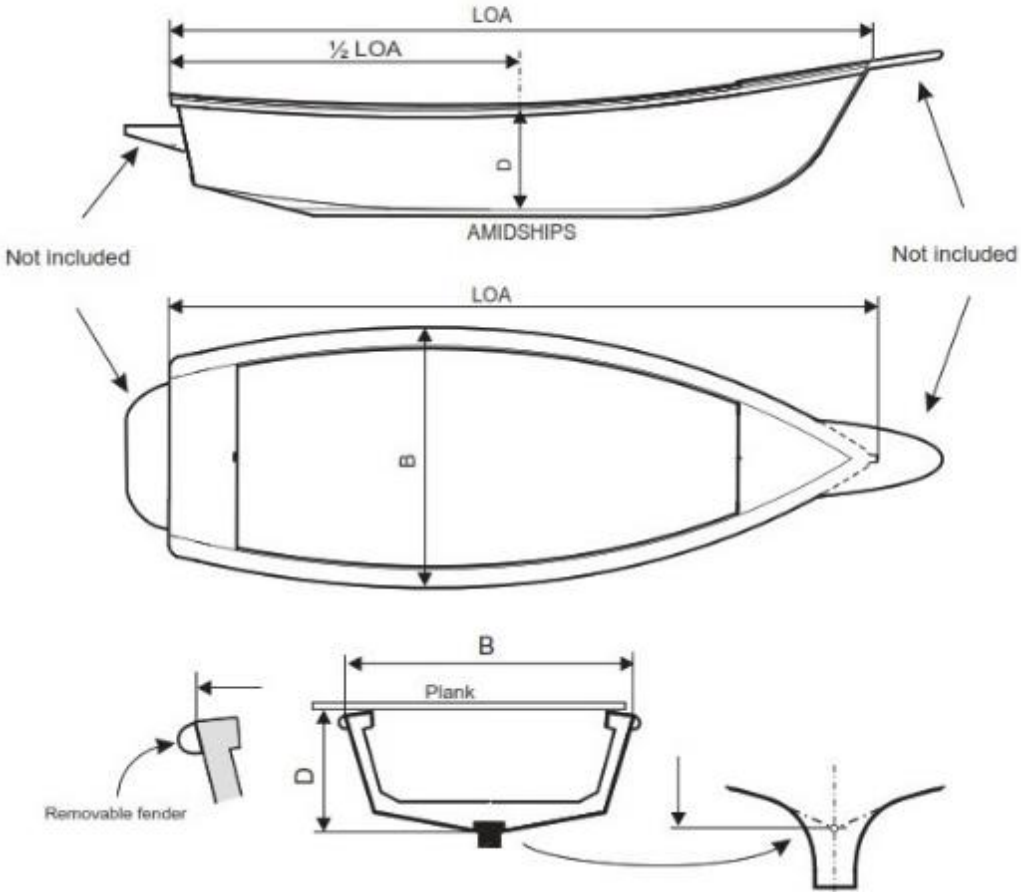

Section 5 – Measure decked vessels

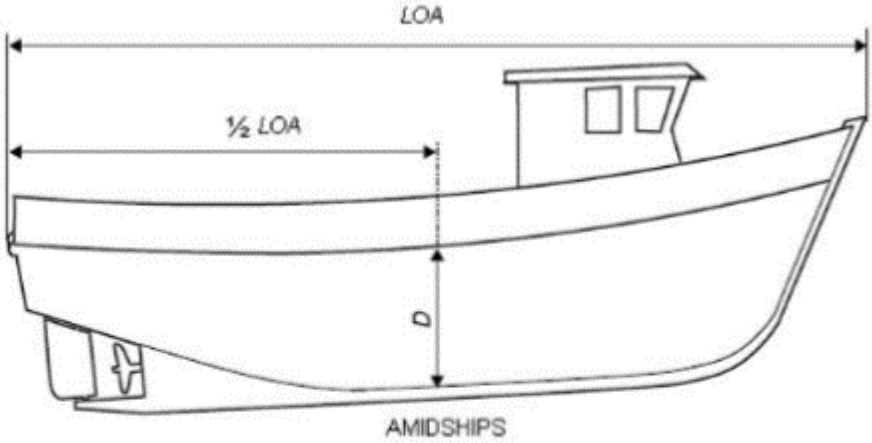

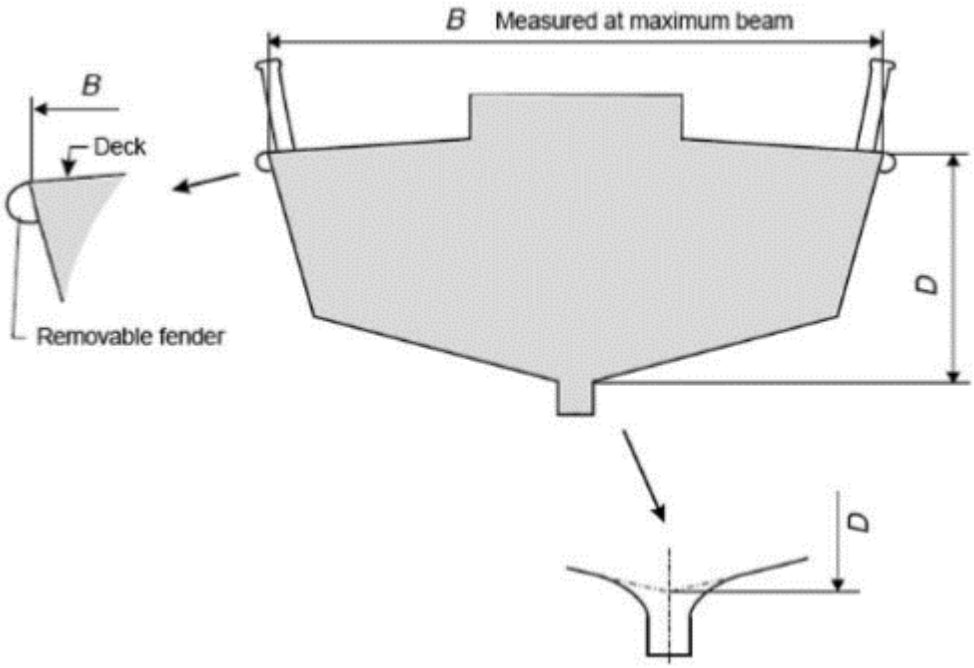

Section 6 – Calculate cubic number

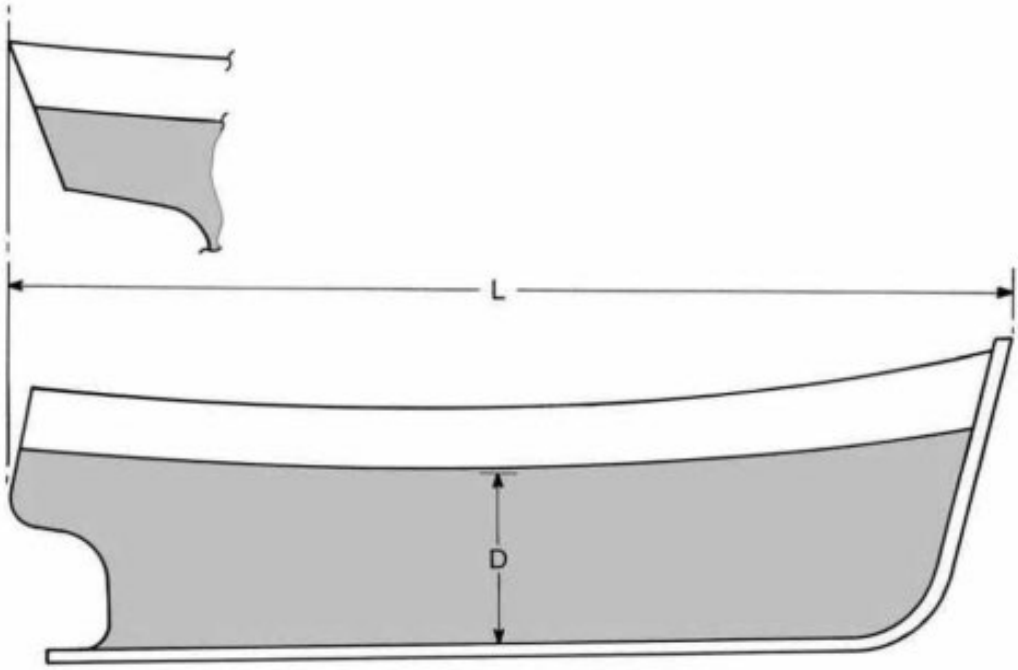

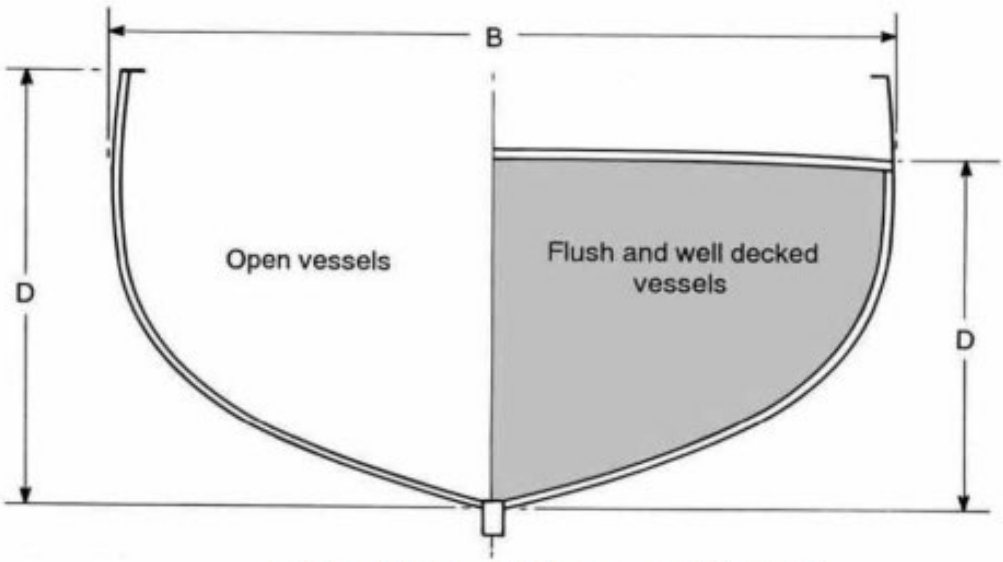

LOA x *B* x *D* = Cubic numeral (CuNo)

Section 7 – Vessel condition, use and ownership		
CONDITION	ANSWER & COMMENTS	NOTES
Year vessel built		
Good working condition		
Poor working condition		
Under repair		
Broken in need of repair		
Broken end of life		
In use frequently		
In use occasionally		
Not in use		
Vessel certified for use		Maritime authority approval
Vessel registered, yes/no		
Vessel has markings and identification		Record markings and identification
Vessel owner operated		
Vessel fisher operated, not owned		
Vessel hired by operator		
Other operational arrangements		

Section 8 – Vessel construction		
CONSTRUCTION	ANSWER & COMMENTS	NOTES
Solid wood		Type of Wood
Solid wood & plywood		Type of wood Type of plywood
Plywood		Type of plywood
Dugout		Tree species
Other wood construction		
Fastened with screws		
Fastened with nails		
Fastening material		Steel, bronze, galvanised etc
GRP		
GRP & wood		Type of wood
GRP & plywood		Type of plywood
Aluminium		
Steel		

Other materials		

Section 9 – Vessel propulsion		
EQUIPMENT	ANSWER & COMMENTS	NOTES
Outboard motor single		2 stroke or 4 stroke
Power, hp or kW		
Outboard motor twin		2 stroke or 4 stroke
Power, hp or kW		
Inboard motor		Gasoline or diesel
Power, hp or kW		
Normal fuel load, litres		
Normal operating range, nm		
Batteries fitted		Navigation lights and radios Number/capacity & Voltage
Solar Panels		Watts
Engine alternator		Amps and voltage
Other propulsion method e.g. Sail		
Paddles or Oars carried		
(Emergency) Sail carried		Size of sail m2
Tools carried		For motor and other equipment onboard

Section 10 – Vessel fishing gear[12]		
ITEM	ANSWER & COMMENTS	NOTES
Longline	Hydraulic or Engine powered	
Longline, hand hauled		
Length of mainline, m or km		
Number of hooks		
Hooks and Lines		
Handlines		
Mechanised lines		
Vertical lines		
Trolling lines		
Nets		
Gillnets		

[12] Please see for gear types and characteristics: https://www.fao.org/documents/card/en/c/cb4966en

Squid Jigging		
Traps and Pots		
Surrounding nets		
Diving		

Section 11 – Safety equipment		
ITEM	ANSWER & COMMENTS	NOTES
Approved safety grab bag carried on vessel		
Lifejackets carries, number		
Life raft or Buoyant apparatus, number		
Lifebuoys with line, number		
Capsize rope		
Torch		
Emergency flares		
Mirror & whistle		
Paddles		
Fire extinguisher, number		
Marine compass		
First aid kit		
Bailer		
Drinking water carried, litres		
Radar reflector		

All boats should carry life jackets for every crew member, and should be stored in an accessible place. Small boats without possibility for storage of life jackets should satisfy the requirement for flotation in a flooded condition.

LIFE BUOY

One per boat, stored on the port or starboard side of the deckhouse.

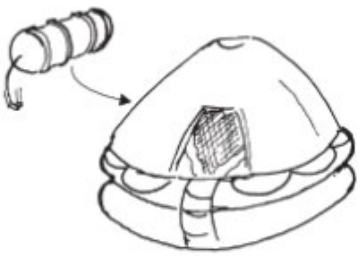

INFLATABLE LIFE RAFT

Unfortunately, expensive.
Must be checked every year.

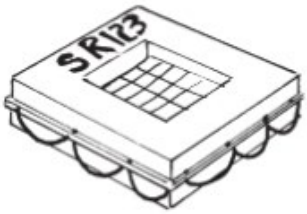

BUOYANT APPARATUS (LIFE FLOAT) WITH MARKING

Can be made locally, but does not offer the crew much protection.

Section 12 – Electronic communications		
ITEM	ANSWER & COMMENTS	NOTES
VHF radio, fixed		
VHF radio, handheld		
GPS		
Mobile phone		State normal Range
Navigation lights		
Fish finder		
EPIRB		

Section 13 – Deck equipment		
ITEM	ANSWER & COMMENTS	NOTES
Anchor and		Weight
Chain or rope		Length
(Bilge) Pumps fitted		Type and number
Railings and hand holds fitted		To ensure safe working
Hydraulic line drum/winch		

Section 14 – Definitions	
Colregs	Collision Regulations
Cubic Numeral (CUNO)	A measurement of the volume and size of the vessel, see section 6 for details.
EPIRB	***Emergency Position Indicating Radio Beacon***
GRP	Glass reinforced plastic, usually made from polyester resin and glass fibres
GPS	Global position system
Capsize rope	Fitted to the vessel to allow persons to hold on to the vessel in the event of a capsize
VMS	Vessel monitoring system

GCF REGIONAL TUNA PROGRAMME

"Adapting tuna-dependent Pacific Island communities and economies to climate change".

Study 12

TECHNICAL REPORT TO SUPPORT STUDY 12

Daniel Davy – Consultant Naval Architect – Revision B - 12 May 2023

Consultants Deliverable #2:

Short report related to Inputs into the 2nd and 3rd Progress report in matters related to the design phase, and vessel prototype construction and testing phase

A. Requirements for technically appropriate vessel design, including the technical specifications details that the project will require.

B. Requirements needed for professional technical assessments of existing motorised FAD fishing vessels and recommendations for improvements and modifications to basic safety, fuel-efficiency, emissions, and storage criteria.

C. List of requirements to be considered for the construction and full-scale testing of the most appropriate vessel designs agreed to after consultations with national fisheries agencies.

Part A

Requirements for appropriate vessel design and specifications

The designs for new vessels will need to address a number of factors in order to fulfil the essential requirements. The first is to prepare a design specification which sets out the required functions of the vessel and main parameters – dimensions, areas, volumes and capacities. This will not necessarily define a vessel design but will define an overview of what is required.

A fundamental parameter to consider is the vessel's capacity and volume, this represents the space available for the storage of fish, ice, gears, crew, machinery, fuel and water. Capacity and volume defines the ability of a vessel to land fish and to ensure economic success. The hull form (design) will need to specify capacity and volume, as well as achieving sufficient safety, stability and freeboard, and the performance and range needed to access the fishing grounds envisaged. The operating speed and range are linked to vessel capacity because sufficient fuel must be carried to complete a fishing trip to preferred fishing grounds. This is balanced against the power and fuel consumption of the motors and thus the vessel's overall weight.

The material used for construction of the vessel must be decided at an early stage and this choice will also have a significant effect on the weight of the vessel. The choice of material will

be based on a number of factors, including: cost, availability, strength, longevity and the experience of builders in the region.

In terms of developing vessel design specifications, the key items to include are:

- Dimensions and capacity – ice, fish, fuel, water and stores
- Hull form and type – single, catamaran, multi-hull
- Materials and construction method – GRP, ply, timber, aluminium
- Machinery type and power – inboard, outboard
- Systems – fuel, water, pumping, electrical and communications
- Deck area, gear and storage
- Mooring, towing, and anchoring features
- Crew accommodation and facilities (vessel for multi-day trips only)
- Safety features and equipment – lifesaving, flares, lighting, etc.

Part B

Technical assessments of existing fishing vessels and recommendations for improvements

The approach for a technical assessment of the suitability of existing fishing vessels for fishing safely around FADs can be based around the specification for a newbuild vessel. The key elements of a technical assessment are shown in Part A above but should also consider the catalogued information provided in Annex A of the report submitted as Deliverable 1. The technical assessments of existing vessels should therefore focus on three linked areas:

1) The design, form, shape and suitability of the vessel for the fishing activities undertaken. Critical factors are appropriate stability, freeboard, buoyancy and capacity.

2) The condition and integrity of the structural elements of the vessel – the hull, deck and equipment. Assessing damage to the structures and the repairs made over the vessel's life will require special attention.

3) The safety features and safety equipment carried onboard and, importantly, the condition and functionality of these items. There may well be vessels where some required items are not onboard.

In all areas, there will be opportunities to improve the vessel's function and safety and whilst the hull form is largely fixed it is highly likely that there will be aspects of the existing vessel designs where improvements can be made. These could include:

1) The incorporation of insulated fish/ice boxes to improve fish quality (the catch will spoil rapidly if not iced properly). Storage of the catch is also important because it can dictate the value of the fish at landing.

2) The structure of fishing vessels is prone to damage caused by gear handling, berthing alongside wharves and other vessels, and general wear and tear. The damaged parts can be repaired and, in some cases, the repairs may improve the original construction.

3) Installation of navigation lights to improve safety at night and, if available, the energy needed can be provided by low-cost solar panels.

4) If the vessel's stability is not in line with requirements it may be possible to improve this by reducing/ removing weights added during the vessel's life. Where freeboard is insufficient it may be possible to add a cockpit coaming at the sides, and at the transom were swamping of a motor or water ingress can be serious. Ref: https://www.fao.org/3/i3108e/i3108e00.htm

5) Ensuring or improving the condition and quantity of buoyancy spaces (or foam) to ensure that, when swamped, the vessel remains afloat and level with crew onboard.

6) Ensure that sufficient tools and spare parts – especially for the motor – are onboard and in good condition.

7) Ensure that the required safety items are carried, to include at least lifejackets, flares, pump/bailer.

8) In many vessels used for Multi-day trips, the crew's accommodation is not adequate and some modifications can be made to improve cooking facilities and sleeping arrangements.

Part C

Requirements for the construction and testing of the vessel designs

Depending on the location of construction, the procurement of materials and tools needs to be carefully considered given that many of these items may have to be imported/shipped. This can be an expensive and time-consuming process and will need planning. In the same way, procurement and delivery of large items, such as motors, gearboxes and pumps, etc., can have a long lead time and need to be planned in a timely manner.

The availability of a workshop is essential for most types of vessel construction because it enables activities to be carried out under a fixed roof and preferably in an enclosed space. A dry environment and cleanliness in the workshop are important for the health of workers, and to prevent the contamination of materials. Materials should also be stored in the appropriate way. Timber and plywood need to be stored in a dry environment. Other building materials, such as resins, need to be stored carefully in closed containers and at the correct temperatures away from heat ignition sources and sunlight. The workshop will preferably have electrical power by grid or generator to allow the use of power tools, which improves building accuracy and speed. In addition, suitable hand tools will also be required.
The process of building a fishing vessel requires inputs from skilled boatbuilders with experience and training in working with the chosen construction material. Alternatively, where the desired skills are not available, training and supervision will be required to construct a strong and seaworthy vessel.
Testing of the vessels on completion is important especially where a new design (first of class) is being launched. Best practice would be to write a 'trials document' before launching, this ensures that all important aspects of construction are tested. The trial should include the following key test and procedures:

- Before launching, check that all items are correctly installed and secured.
- At launch, test all the auxiliary systems, for example, pumps and electrical items (alongside a wharf or jetty).
- Also, alongside a wharf, check that the engine(s) start and run correctly at an initially low rpm.
- Starting low, run the vessel at progressively increasing speeds. Observe any vibrations, noises, and any other unexpected events. Generally, this should be done with a light load and with a full load.
- Check the operation of the vessel, including steering and maneuvering, in a moderate sea state. Observe any unexpected events and any unsatisfactory performance.

- Where required or simply as good practice, a measure of the freeboard and stability of the vessels should be established. Methods for this may be found in various documents including: https://www.fao.org/3/i3108e/i3108e00.htm
- A 'swamp test' should be carried out in accordance with a recognized (approved) method.
- Photography of all aspects of the trial for record keeping.

ANNEX II Logical Framework

IMPACT	**F**ood security in Pacific SIDS has increased			
OUTCOME	**Activity Outcome** fishers that fish on anchored FADs (a-FAD) will have access to safe, proven, economically viable and appropriate vessel designs which allow them to fish further offshore and in safer ways			
Indicator	**Baseline**	**Target**	**Means of Verification**	**Assumptions**
Activity implementation arrangements have been created	0	1	Inception Report Steering Committee report	Activity starts on time
By end of 2nd Quarter after project start up Needs assessment of suitability of existing small vessels for fishing around FADs (based on criteria listed in Annex 1) 2 vessel designs of 6 length categories of prototype fishing vessels capable of fishing safely on near and offshore a-FADs are provided to Pacific SIDS	0	2 designs 3 length categories / design	Needs Assessment Report of national consultants, Naval Architects and Economist Vessel General Arrangement Plans, lines plans, towing and seakeeping test results Model vessels (scale 1:6 or 1:7) tested in towing tanks Vessel Specifications Activity reports	Fisheries Departments and stakeholders cooperate and provide logistical and administrative support to the activity Fish resources remain stable
By end of 3rd quarter of second year after project start up 2 (1 x open daily and 1 x multi-day) fishing vessels are	0	2	Contract with a boat builder in one of the activity countries. 2 prototype fishing vessels	Boat builder can source the materials required for the prototype vessels

built and tested in operation for one year			built up to international standards Master Fisherman report Activity report Country Report published by FAO/CI and SPC	Competent Master fishermen recruited to conduct sea trials
By end of 4th quarter of third year after project start up Cost benefit analyses and technoeconomic performance reviews of the prototype vessels and traditional vessels are made available to activity countries	0	2	Cost benefit analysis report Techno-economic performance report, comparing current vessel performances with those of the prototype vessels	Fishers and fishing vessel owners contribute to the data collection efforts. Competent master fisherman and good record keeping by the department where the tests are conducted.
By 2nd Quarter of fourth year after project start up. Participating countries have draft enabling policy, legislative and financing frameworks for the construction and operations of safe, energy efficient and economically viable fishing vessels for the Pacific SIDS	0	At least 3 countries	Draft vessel safety regulations Draft vessel construction guidelines Draft finance and insurance policies and strategies for fisheries	During full scale tests the prototype vessels prove to be safer and economically viable

OUTPUT 1	*Cost effective activity management*	*Responsibility*
SUB-ACTIVITIES for achieving output 1		
Number	**Description**	
1.1	Recruitment of lead consultant/coordinator	FAO LTO
1.2	Recruitment of technical expertise and contracting of service providers/ companies, using UN procurement and recruitment processes	FAO LTO FAO Budget Holder Consultant/Coordinator
1.3	Review and update work plan, Virtual workshop with GCFRTP focal points	Consultant/Coordinator
1.4	1st. meeting of activity Task force / Steering Committee	GCFRTP CI / FAO Consultant/Coordinator
1.5	Preparation of activity inception meeting	Consultant/Coordinator
1.6	Inception report with updated work plan	Consultant/Coordinator
1.7	Activity management office established at the Sub regional for office for the Pacific islands in Samoa (SAP). A PMU will be established and an internal task force will monitor implementation	FAO LTO FAO Budget Holder Consultant/Coordinator
1.8	Establish an FAO activity task force to monitor activity implementation	FAO Budget Holder
1.9	Semi-annual progress reports preparation	Consultant/Coordinator FAO LTO
1.10	Mid-term external review and final activity evaluation	FAO Budget Holder/FAO LTO/ review consultants
1.11	Financial and technical closure of activity	FAO LTO/ FAO Budget Holder

OUTPUT 2	***2 designs of prototype fishing vessels with 6 different lengths have been prepared and accepted by the Fisheries Departments, fishers and boat owners***	***Responsibility***
SUB-ACTIVITIES for achieving output 2		
Number	**Description**	
2.1	Conduct detailed country technical, socio economic and environmental needs analysis[13] studies to update survey and consult with stakeholders to verify their needs to best determine common attributes of importance to be included in the designs. Prepare a catalogue of existing vessel designs in participating	Consultant/coordinator Naval Architect Master Fisherman 14 National Consultants

[13] See overview description on page

OUTPUT 2	*2 designs of prototype fishing vessels with 6 different lengths have been prepared and accepted by the Fisheries Departments, fishers and boat owners*	*Responsibility*
SUB-ACTIVITIES for achieving output 2		
Number	**Description**	
	countries. The template for the catalogue is in Annex IX.	
2.2	Naval Architect prepares 2 designs with 6 different lengths (3 per design)	Naval Architect
2.3	Validation workshop to present designs, receive feedback and decision taken as to best place to undertake trials.	Consultant/coordinator Naval Architect Master Fisherman
2.4	Build models of the selected designs and arrange for tow tank and seakeeping tests	FAO LTO/Naval architect and tow tank facility
2.5	Prepare Boat Builder and fisheries infrastructure data base	Consultant/coordinator

OUTPUT 3	*Two prototype fishing vessels constructed- in line with international construction and safety standards and guidelines*	*Responsibility*
SUB-ACTIVITIES for achieving output 3		
Number	**Description**	
3.1	Finalise identification of Boat Building Companies. Finalise technical specifications Prepare tender documents and organize the procurement	Consultant/Coordinator Naval Architect & Master Fisherman FAO LTO & FAO procurement
3.2	Contracting of Boat Building Company to build prototypes (only one company to build the three boats) 1 Multi day a d 2 Day fishing	FAO LTO FAO Procurement
3.3	Training of boat builders from each country at the contracted shipyard	Consultant/Coordinator FAO LTO FAO Procurement Country focal points to ID Builders
3.4	Supervision of construction and ensure safety requirement meet best practice standards Supervision reports	Naval Architect & Master Fisherman
3.5	Prepare a step-by-step video and written guidelines for the construction process to build the prototypes	Naval Architect and Videographer company FAO procurement

OUTPUT 3	*Two prototype fishing vessels constructed- in line with international construction and safety standards and guidelines*	*Responsibility*
SUB-ACTIVITIES for achieving output 3		
Number	**Description**	
3.6	Preparation of specifications of fishing gears, engines, outfitting, navigation and safety equipment	Master Fisherman, FAO LTO & FAO Procurement
3.7	Conduct sea trials, handover of the boats to FAO and demonstrate effectiveness of safety equipment and compliance with regulations in place.	Naval Architect Master Fisherman
3.8	Organize a regional workshop to present the designs, step by step video about the construction, construction guidelines and the constructed prototype vessels	Naval Architect Master Fisherman FAO LTO

OUTPUT 4	*Two new fishing vessel prototypes successfully tested in commercial fishing operations*	*Responsibility*
SUB-ACTIVITIES for achieving output 4		
Number	**Description**	
4.1	Identify and select experienced professional fishers/boat owners for the (one-year) trails of the prototype vessels	Consultant/Coordinator (with inputs from Fisheries Departments)
4.2	Develop the methodology for the techno-economic performance assessment study of Pacific islands fishing vessel types.	Consultant/coordinator FAO LTO
4.3	Carry out a techno-economic performance assessment study of at least 6 Pacific Island fishing vessel types	Consultant/coordinator National consultants FAO LTO
4.4	Prepare and conclude lease contracts with commercial fishers/boat owners for the two prototype vessels (including arrangements for maintenance, repair, insurance, sea trial days and data collection and reporting)	FAO LTO Consultant/Coordinator
4.5	Prepare Letters of Agreement with two Departments of Fisheries for supervision of the sea trials and related reporting.	LTO and Consultant/Coordinator
4.6	Participate in sea trials of Multi day and daily fishing vessels, provide fishing	Master Fisherman

OUTPUT 4	*Two new fishing vessel prototypes successfully tested in commercial fishing operations*	*Responsibility*
SUB-ACTIVITIES for achieving output 4		
Number	**Description**	
	gear/technology/operational advice and demonstrate effectiveness of safety equipment, monitor compliance with regulations in place, and report on the trials.	
4.7	Arrange for continuation of protype vessel lease contracts, transfer to other fishers/owners for data collection/trails, or hand over to Fisheries Departments.	LTO and Consultant/Coordinator
4.8	Organize a regional workshop to present the results of the full-scale trials and the techno-economic performance assessment study,	LTO and Consultant/Coordinator Master Fisherman

OUTPUT 5	**Enabling policy, legislative and financing frameworks for the construction and operations of safe, energy efficient and economically viable fishing vessels for the Pacific SIDS**	*Responsibility*
SUB-ACTIVITIES for achieving output 5		
Number	**Description**	
5.1	Conduct a review of fisheries and maritime policies, legislation and management measures in activity countries relevant and RFBs/RFMOs that affect fishing vessel design, construction and operations	Maritime/fisheries legal expert FAO LEGN
5.2	Review of safety at sea legal aspects and prepare draft fishing safety regulations for various types of fishing vessels, for incorporation in national legislation of Pacific SIDS	Maritime/fisheries legal expert FAO LEGN
5.3	Desk review of financial policies and legislation and their effects on fishing fleet development in the activity countries	Finance/ insurance expert FAO LTO
5.4	Conduct a supply/demand assessment for financial and insurance services, and review available tools and financing instruments, terms and conditions of loans, government plans, past and	FAO LTO Consultant/coordinator Financial/insurance services expert National Consultants

OUTPUT 5	Enabling policy, legislative and financing frameworks for the construction and operations of safe, energy efficient and economically viable fishing vessels for the Pacific SIDS	*Responsibility*
SUB-ACTIVITIES for achieving output 5		
Number	**Description**	
	ongoing loan schemes and overall study of financial and insurance services provision to the fisheries sectors in most activity countries.	
5.5	Organize a regional fisheries finance and insurance workshop with Pacific SIDS to discuss the findings of the various studies and prepare policy recommendations and strategies.	FAO LTO Financial/insurance services expert Consultant/Coordinator GCFRTP/SPC

ANNEX III Beneficiary analysis

Beneficiary Analysis

The following is a preliminary SWOC analysis of the various beneficiaries that have be identified. On activity inception one of the first tasks will be to review, update and expand this stakeholder. The objective of this preliminary stakeholder analysis is to reveal the connectivity between different stakeholders. This analysis also facilitates the activity design and shows the way to increase strengths, decrease weaknesses and mitigate challenges within the activity framework.

SWOC Stakeholder Analysis

Stakeholder	Strengths	Weaknesses	Opportunities	Challenges
Fishers	• Competent handling of small boats • Professionalism and dedicated to catch Fish	Generally Low education No skills on larger boats Weak safety culture Lack of knowledge on safety Lack of safety equipment Economic dependence on vessel owners	Training and certification of fishers Build skills Professionalize the sector	The education levels of some small-scale fishers are insufficient to pass the training requirements for multi day vessels leading to reduced numbers of fishers qualifying to operate multi day boats Requires long term strategy Training given is focused on merchant ships
Boat Owners	Business management Have financial stake Fishing Knowledgeable	May not be interested to invest more money	Increase investment if right policies implemented Banking system gains confidence to provide loans	Lack of enabling policy, management and regulatory environment to support new designs. Commercial banks have bad

Stakeholder	Strengths	Weaknesses	Opportunities	Challenges
			Access to vessel insurance increases availability of credit/loans	experiences with repayment of loans in sector and continued reluctance to finance boats
Boat Builders	Build traditional boats Skilled and experienced	Lack of skills in modern boat building Lack of tools Lack of material for boat construction	Training in boat building Integrate boat building into maritime school curriculums Provision of tools Improve safety standards of boats	No enabling environment to finance boats Competition from imported boats Training in boat building needs long term financing commitments to be sustainable albeit an opportunity
Fisheries Departments	Committed to improvement of the fisheries sector Power to legislate Policy implementation Funding opportunities available through bilateral and multilateral activitys Most countries have maritime training schools	No budget for boat building Lack of boat building technical personnel Difficulty in effectively implementing safety regs Low staffing rates. Weak safety and MCS regulations for new designs Financial constraints	Formulate policies and regulations on MCS and (vessel) Safety Improve national food security Provide budget/loan guarantees or subsidies to kick start vessel construction Make fishing vessel/third-party insurance mandatory through legislation	No or few policies that support investment in fisheries to increase access to finance and insurance for local fishers

Stakeholder	Strengths	Weaknesses	Opportunities	Challenges
		lead to poor construction methods and materials	Establish or strengthen national fishing vessel records and registries	
GCFRTP/FAO	Budget Technical Competence Long term planning	Bureaucracy (e.g., activity agreements to be signed by all activity countries) Large area with many countries complicates logistics and increases costs	Good activity design and proper planning Increase implementation skills Provide policy guidance	Slow implementation by activity partners due to many activities and lack of personnel Not enough budget to support construction of demonstration vessels in each activity country
Local Tuna Value Chain	Dynamic Private sector in a few larger populated countries	Mainly subsistence in some smaller countries Lack of tools and equipment and infrastructure Low spending power of populations	Integrate small scale fish into export markets where possible Improve distribution and cold chain storage using solar and renewable energy Improve fish transport from outer island islands and remote areas to urban centres. Increase food security and reduce spoilage and waste	Lack of policies and support for marketing and commercialization of fish through credits. Fragmented markets Fixed fish prices in some countries which may compromises the financial viability of new designs or make them inviable

Stakeholder	Strengths	Weaknesses	Opportunities	Challenges
			Develop local products with longer shelf life	

ANNEX IV Workplan

#	Description of Activities to Achieve Outputs	Year 1				Year 2				Year 3				year 4				Responsible
		Q 1	*Q 2*	*Q 3*	*Q 4*	*Q 1*	*Q 2*	*Q 3*	*Q 4*	*Q 1*	*Q 2*	*Q 3*	*Q 4*	*Q 1*	*Q 2*	*Q 3*	*Q 4*	
1.0	***Output 1. Cost effective activity management***																	
1.1	Recruit Lead Consultant Fisheries/Economist																	FAO LTO
1.2	Recruitment of technical assistance expertise and contracting of service providers/ companies, using UN procurement and recruitment processes.																	FAO LTO FAO Budget Holder Consultant/ Coordinator
1.3	Review and update work plan, Virtual workshop with GCFRTP focal points																	Consultant/ Coordinator
1.4	1st. meeting of activity Task Force/Steering Committee																	GCFRTP CI / FAO Consultant/ Coordinator
1.5	Preparation of activity inception meeting																	Consultant/ Coordinator
1.6	Inception report with updated work plan																	Consultant/ Coordinator
1.7	FAO make provisions for the activity coordinator office at SAP																	FAO LTO FAO Budget Holder Consultant/ Coordinator
1.8	Establish an FAO activity task force to monitor activity implementation																	FAO Budget Holder

#	Description of Activities to Achieve Outputs	Year 1				Year 2				Year 3				year 4				Responsible
		Q 1	*Q 2*	*Q 3*	*Q 4*	*Q 1*	*Q 2*	*Q 3*	*Q 4*	*Q 1*	*Q 2*	*Q 3*	*Q 4*	*Q 1*	*Q 2*	*Q 3*	*Q 4*	
1.9	Semi-annual progress reports preparation																	Consultant/ Coordinator FAO LTO
1.10	Mid-term external review and final activity evaluation																	FAO Budget Holder/FAO LTO/ Mid Term Review consultants
1.11	Financial and technical closure of activity																	FAO LTO/ FAO Budget Holder
2.0	***Output 2. Two designs of prototype fishing vessels with 6 different lengths have been prepared and accepted by the Fisheries Departments, fishers and boat owners***																	
2.1	Conduct detailed country needs analysis studies to update survey and consultation with beneficiaries and stakeholders to verify their needs and physical needs to best determine common attributes of importance to be included in the designs																	Consultant/ Coordinator Naval Architect countries Master Fisherman countries
2.2	Naval Architect prepares 2 designs with 6 different lengths (3 per design)																	Naval Architect
2.3	Validation workshop to present designs, receive feedback and decision taken as to the best place to undertake trials.																	Consultant/ Coordinator Naval Architect & Master Fisherman
2.4	Build models of the selected designs and arrange for tow																	FAO LTO/Naval architect

#	Description of Activities to Achieve Outputs	Year 1				Year 2				Year 3				year 4				Responsible
		Q 1	*Q 2*	*Q 3*	*Q 4*	*Q 1*	*Q 2*	*Q 3*	*Q 4*	*Q 1*	*Q 2*	*Q 3*	*Q 4*	*Q 1*	*Q 2*	*Q 3*	*Q 4*	
	tank and seakeeping tests																	and tow tank facility
2.5	Prepare national boat builder and fisheries infrastructure data base																	Consultant/ Coordinator
3.0	***Output 3. Two prototype fishing vessels constructed- in line with international construction and safety standards and guidelines***																	
3.1	Finalise identification of Boat Building Companies. Finalise technical specifications Prepare tender documents and organize the procurement																	Consultant/ Coordinator Naval Architect & Master Fisherman (Technical content) FAO LTO & FAO procurement
3.2	Contracting and Boat Building to build prototypes (only one company to build the two boats)																	FAO LTO FAO Procurement
3.3	Training of boat builders from each country																	Consultant/Coordinator FAO LTO FAO Procurement Country focal points to ID Builders
3.4	Supervision of construction and ensure safety requirement meet best practice standards Supervision reports																	Naval Architect & Master Fisherman

#	Description of Activities to Achieve Outputs	Year 1				Year 2				Year 3				year 4				Responsible
		Q 1	*Q 2*	*Q 3*	*Q 4*	*Q 1*	*Q 2*	*Q 3*	*Q 4*	*Q 1*	*Q 2*	*Q 3*	*Q 4*	*Q 1*	*Q 2*	*Q 3*	*Q 4*	
3.5	Prepare a step-by-step video and written guidelines for the construction process to build the prototypes																	Naval Architect and Videographer company FAO procurement
3.6	Procurement of fishing gears, engines, outfitting, navigation and safety equipment																	Master Fisherman, FAO LTO & FAO Procurement
3.7	Conduct sea trials, handover of the boats to FAO and demonstrate effectiveness of safety equipment and compliance with regulations in place.																	Naval Architect Master Fisherman
3.8	Organize a regional workshop to present the designs, step by step video about the construction, construction guidelines and the constructed prototype vessels																	Naval Architect Master Fisherman FAO LTO
4.0	***Output 4. Two new fishing vessel prototypes successfully tested in commercial fishing operations***																	
4.1	Identify and select experienced professional fishers/boat owners for the (one-year) trails of the prototype vessels																	Consultant/ Coordinator (Inputs from Fisheries Departments)

#	Description of Activities to Achieve Outputs	Year 1				Year 2				Year 3				year 4				Responsible
		Q 1	*Q 2*	*Q 3*	*Q 4*	*Q 1*	*Q 2*	*Q 3*	*Q 4*	*Q 1*	*Q 2*	*Q 3*	*Q 4*	*Q 1*	*Q 2*	*Q 3*	*Q 4*	
4.2	Develop the methodology for the techno-economic performance assessment study of Pacific islands fishing vessel types.																	Consultant/ coordinator FAO LTO
4.3	Carry out a techno-economic performance assessment study of at least 6 Pacific Island fishing vessel types																	Consultant/ coordinator FAO LTO
4.4	Prepare and conclude lease contracts with commercial fishers/boat owners for the two prototype vessels (including arrangements for maintenance, repair, insurance, sea trial days and data collection and reporting)																	FAO LTO Consultant/ Coordinator
4.5	Prepare Letters of Agreement with two Departments of Fisheries for supervision of the sea trials and related reporting.																	LTO and Consultant/ Coordinator
4.6	Participate in sea trials of Multi day and daily fishing vessels, provide fishing gear/technology/ operational advice and																	Master Fisherman

#	Description of Activities to Achieve Outputs	Year 1				Year 2				Year 3				year 4				Responsible
		Q 1	*Q 2*	*Q 3*	*Q 4*	*Q 1*	*Q 2*	*Q 3*	*Q 4*	*Q 1*	*Q 2*	*Q 3*	*Q 4*	*Q 1*	*Q 2*	*Q 3*	*Q 4*	
	demonstrate effectiveness of safety equipment, monitor compliance with regulations in place, and report on the trials																	
4.7	Arrange for continuation of protype vessel lease contracts, transfer to other fishers/owners for data collection/trails, or hand over to Fisheries Departments.																	LTO and Consultant/ Coordinator
4.8	Organize a regional workshop to present the results of the full-scale trials and the techno-economic performance assessment study,																	LTO and Consultant/ Coordinator Master Fisherman
5.0	**Output 5. Policy review on financing of prototypes**																	
5.1	Conduct a review of fisheries and maritime policies, legislation and management measures in activity countries relevant and RFBs/RFMOs that affect fishing vessel design, construction and operations																	Maritime/fisheries legal expert FAO LEGN FAO NFIFO Fishing Safety Officer

#	Description of Activities to Achieve Outputs	Year 1				Year 2				Year 3				year 4				Responsible
		Q 1	*Q 2*	*Q 3*	*Q 4*	*Q 1*	*Q 2*	*Q 3*	*Q 4*	*Q 1*	*Q 2*	*Q 3*	*Q 4*	*Q 1*	*Q 2*	*Q 3*	*Q 4*	
5.2	Review of safety at sea legal aspects and prepare Draft fishing vessel safety regulations for various types/sizes of fishing vessels, for incorporation in national legislation of the Pacific SIDS																	FAO LEGN Maritime/fisheries legal expert FAO NFIFO Fishing Safety officer
5.3	Desk review of financial policies and legislation and their effects on fishing fleet development																	Finance/insurance services expert FAO LTO
5.4	Conduct a survey of financing supply/demand for financial and insurance services, and review the available tools and financing instruments, terms and conditions of loans, government plans, past and ongoing loan schemes and overall study of financial and insurance services provision to the fisheries sectors in most 14 activity countries.																	FAO LTO Consultant/ coordinator Financial/insurance services expert National Consultants
5.5	Organize a regional fisheries																	

#	Description of Activities to Achieve Outputs	Year 1				Year 2				Year 3				year 4				Responsible
		Q 1	*Q 2*	*Q 3*	*Q 4*	*Q 1*	*Q 2*	*Q 3*	*Q 4*	*Q 1*	*Q 2*	*Q 3*	*Q 4*	*Q 1*	*Q 2*	*Q 3*	*Q 4*	
	finance and insurance workshop with Pacific SIDS to present and discuss the findings of the various studies and prepare policy recommendations and strategies.																	

ANNEX V Budget

(USD)

Description		Account		2025	2026	2027	2028	Total
Consultants		5570						
	International		5,542	133,300	142,100	150,150	53,100	478,650
	National		5,543	84,000	84,000	84,000	84,000	336,000
			5556 - DSC	6,112	6,473	6,473	2,863	21,921
Contracts		5650						
			5,650	375,000	65,000	225,000	0	665,000
			5586 - DSC	3,520	300	1,500	0	5,320
Travel		5900						
			5,900	57,000	59,000	59,000	46,000	221,000
			5906 - DSC	528	616	616	528	2,288
Training		5920						
			5,920	0	50,000	0	10,000	60,000
			5906 - DSC	0	132	0	44	176
Equipment								
	Expendable	6000	5,024	6,800	7,800	9,300	6,800	30,700
			5956 - DSC	132	176	220	132	660
	Non-expendable		5,025	5,000	0	0	0	5,000
		6100	6056 - DSC	88	0	0	0	88
Technical Support Services		6120		24,240	24,240	42,742	29,718	120,940
Report costs		6111		0	0	0	6,550	6,550
Evaluation costs		6116		0	0	0	25,000	25,000
General Operating Expenses		6300						
	Security (Headquarters base		6216 - DSC	155	155	349	349	1,008
	Office Occupancy Costs (Hea		6280 - DSC	265	265	596	596	1,723
	Security (Field based person		6216 - DSC	3,688	3,688	1,918	1,918	11,210
	Miscellaneous, insurance, vi		6,152	2,500	9,200	7,548	4,000	23,248
	General Operating Expenses		5956 - DSC	132	220	264	176	792
General Operating Expenses		5050						
	IT Services		6420 - DSC	2,688	2,856	2,856	1,176	9,576
	Envirinmental and social saf		DSC	625	625	625	625	2,500
	Financial Services		6421 - DSC	26,726	0	0	0	26,726
Indirect Support Costs (7%)		6130		51,275	31,979	41,521	19,150	143,925
Total Budget				783,773	488,825	634,677	292,725	2,200,000

Note: DSC= direct support costs

ANNEX VI List of contracts

Contract Name	Contractor Type	Summary of Details	Amount (USD)
Test boat design/ models in a tow tank	Maritime Research Institute	Construction of models according to design Test in tow tank Prepare report	30 000
Boat Building**	Boat building company/Boat yard	Construction of 1 multi day boat Construction of 1 x Day boat Delivery and sea trials	165 000
Step by Step Guide to construction of boats	Video and Graphic Art company	Preparation of video and test	15 000
Lease contract for sea trials	Commercial fishing company	Sea trials of new vessels	10 000
Training of Boat Builders	Boat Yard	Upgrading boat building skills for nationals of participating countries	40 000
Letters of Agreement**	Departments of Fisheries	Participating in national meetings and regional workshops	420 000

** These contracts will be split between different institutions

ANNEX VII Risk Matrix

Table 3Risk Management Table

Risk	Impact	Probability	Mitigation
Non or only partial technical acceptance of the new designs by governments and fishers due to wide financial, cultural, demographic, social and geographic diversity amongst participating countries. Low uptake of designs by fishers.	High	Medium	At activity start up an updated survey of existing fishing vessel, demographics, financials, social and geographical will be carried out to provide the most common essential requirements for each country. (FAO) Based on the most common essentials the naval architect prepares 1 multi day and 1 day fishing design. (FAO) Designs validated by stakeholders at workshop and ongoing engagement with stakeholders. (Governments) Each design will have 3 different lengths overall with corresponding CUNOs (Cubic Number). (FAO)
Lack of trained qualified personnel for multi day vessels	High Fishing further offshore for multi-day boats requires more training of captains and engineers	Medium	The legal safety review of identify Gaps in the laws and regulations related to design, construction, equipment and qualifications for the vessels. (FAO) Governments will need to finance phased

Risk	Impact	Probability	Mitigation
			training programs for small scale fishers to use multi day vessels. These should hand in hand with donor and multi-lateral financing and or ODA (Governments) There are already existing maritime training schools in 11 of the participating countries[14] (Governments) Only countries requiring multi day boats will require additional training (Governments)
Multi day fishing vessel designs are not culturally acceptable	Innovation is always more difficult to accept over traditional designs Culturally fishers may not want to change from daily fishing to multi day fishing trips	Medium	Fishers open to try but require proof that the multi-day fishing vessels are profitable Prototypes of multi day fishing vessel design will be tested over 1 year fishing and results shared. (FAO) Multi day fishing vessels are not essential for all countries. There will be 6 different size options for multi-day and day fishing vessels.
Reluctance to finance new designs as these were not tested in	High There will be limited uptake as only 1	High Mainly due to the conservative and	The results of the full-scale tests will be made available including their financial viability at a

[14] Maritime schools exist in Cook Islands, Federated States of Micronesia, Fiji, Kiribati, Marshall Islands, Papua New Guinea, Samoa, Solomon Islands, Tonga, Tuvalu, Vanuatu.

Risk	Impact	Probability	Mitigation
a particular country	multiday and 1 day fishing design will be tested in one country as it is not possible to test both designs and sizes in all countries	risk averse nature of governments and fishers.	regional stakeholder workshop, along with policy options. (Governments) Activity will engage with governments and financing institutions and policy makers to create incentives to finance fishing fleet improvements. (FAO) There will be 6 different vessel lengths to suit various fishing operations and financing options. (FAO)
Insufficient a-FADS installed in deep waters	High Vessels fit for offshore will fish inshore with possible limited viability	Low	The GCPRTP has a Activity component to assist countries to develop offshore a-FADs
Natural disasters or human error destroy prototypes, cause ship builders or crew accidents and or interrupt fishing trials	High Slow activity implementation if prototypes must be rebuilt Lack of funds to rebuild prototypes	Medium Natural disasters are increasing in intensity and frequency in the Pacific. Accidents in fisheries happen more frequently than in most other occupations.	Prototypes will be built in bona fide shipyards that have for accidents (fire, theft, human error) and natural disasters. Prototypes will be insured during the trials (FAO) Safety standards and safety gears will be applied and inspected throughout construction and trails (FAO).
Resurgence of COVID-19 or other Pandemics	High	Low to Medium	Use as many local human resources as possible. (FAO)

Risk	Impact	Probability	Mitigation
			Respect vaccine and travel norms. Monitor early warnings. (FAO)
Weak stakeholder engagement by some governments and fishers	High The government, fishers and their organizations are important to the success of the activity and for scaling up. It is important that they are actively involved in the analysis, choices and technical inputs to overcome the many challenges	Medium Due to the disperse nature of the Pacific island states and expensive travel costs some participating countries may not always join in regional events Stakeholders may easily feel left out if there is no activity in their country or engagement on a regular basis Due to the indicative funding of this activity, there is insufficient funding to have a full-time activity coordinator for the entire activity duration	A consultant coordinator will be engaged to coordinate and tasked to follow-up with the countries. (FAO) There are other studies that will be taking place and it is important that other activities being implemented in the countries are kept up to date and engaged. (FAO SAP, SPC and CI) There should be regular team meetings between the consultant/coordinator and SPC/CI and other persons intervening on behalf of the GCFRTP. (FAO) The SAP Fisheries and aquaculture Officer based in Samoa will play an important role in filling in for the consultant coordinator.

ANNEX VIII Results of a preliminary vessel and fishing operations survey among participating countries

Technical Specification of Vessels used in FAD fishing

Country / Spec	Cook Islands	FSM	Fiji	Kiribati	Marshall Islands	Niue	Nauru	Palau	PNG	Samoa	Solomon Islands	Tonga	Tuvalu	Vanuatu
# FADs	>20	>20							10-20	>20	>20		>20	
Boat Type	Alu Skiff	FRP							Plank + FRP	FRP	FRP		Wood Skiff	
Material	AL/Plank	FRP							P + Dugout	FRP	Plank		Plywood	
Avg. LoA	8-10M	6-8 m							<4+4-6	8-10	8-10		6-8 m	
Avg. Beam	1.8m	1.5 m							1.8?	2+	1.5		+2 m	
Max/Min HP	100/60	40/15							40/15	75/40	60/15		60/15	
Type Ice Box	Portable	Portable							Portable	Portable	Portable		Portable	
Sport FAD fishers	Yes	Yes							No	Yes	No		None	
Distance to sea mounts	22	20 nm							6 nm	None	3		60 nm	

Boat Building

Country / Spec	Cook Islands	FSM	Fiji	Kiribati	Marshall Islands	Niue	Nauru	Palau	PNG	Samoa	Solomon Islands	Tonga	Tuvalu	Vanuatu
Registration of Boat Builders	Yes	No							Yes	Yes	No		No	
Individual / Companies	Both	None							Both	Both	Both		Individual	
Legislation on Construction	No	None							Some provinces	Yes	No		No	
Training of builders	No	None							No	Yes	No		No	
Slipway /LoA	No	None							No	No/13m	No/NA		Yes	
Majority Imported Boats	No	Yes							No	No	No		No	
Availability of Tools	No	Yes							No	Yes	Yes		No	
Optimum LoA	6-8 m	6 – 8 m							8-10 m	12-14 m	8-10 m		8 -10 m	

Safety at Sea

Country Spec	Cook Islands	FSM	Fiji	Kiribati	Marshall Islands	Niue	Nauru	Palau	PNG	Samoa	Solomon Islands	Tonga	Tuvalu	Vanuatu
Safety regulations	Yes	Yes							**Some Province**	Yes	No		No	
Status of Regulations	Done	Pending							**Pending**	Pending	No		No	
Life jackets /Grab Bags	Yes	No/No							Yes/no	Yes	No		Yes	
Inspection of boats	Yes	No							No	Yes	No		No	
Communications / Coverage	Mobile Limited	Mobile Limited							Mobile wide	Mobile Wide	Mobile Wide		Mobile V. Limited	
# Fishers drifted away in the last 5 years	0	12							Many	0	N/A		0	
GPS for sale	No	Yes							Yes	Yes	Yes		No	
# SAR 5 years	1	8							Yes	0	N/A		6	
Accident Reporting	Yes	Yes							Yes	No Reply	Yes		Yes	

Fishing Seasons

COUNTRY	SEASON	JAN	FEB	MAR	APR	MAY	JUN	JUL	AUG	SEP	OCT	NOV	DEC
Cook Islands	GOOD	X	X	X	X							X	X
	POOR					X	X	X	X	X	X		
FSM	GOOD			X	X	X	X	X	X	X	X		
	POOR	X	X									X	X
Fiji	GOOD												
	POOR												
Kiribati	GOOD												
	POOR												
Marshall Islands	GOOD												
	POOR												
Niue	GOOD												
	POOR												
Nauru	GOOD												
	POOR												
Palau	GOOD												
	POOR												
PNG	GOOD	**Variable depending on area**											
	POOR	**Variable depending on area**											
Samoa	GOOD					X	X	X	X	X	X		
	POOR	X	X	X	X							X	X
Solomon Islands	GOOD			X	X	X	X	X	X	X			

COUNTRY	SEASON	JAN	FEB	MAR	APR	MAY	JUN	JUL	AUG	SEP	OCT	NOV	DEC
	POOR	X	X								X	X	X
Tonga	GOOD												
	POOR												
Tuvalu	GOOD	X	X	X	X	X	X	X	X	X	X	X	X
	POOR	NA	NA	NA	NA	NA	NA	NA	NA	NA	NA	NA	NA
Vanuatu	GOOD												
	POOR												

Training and capacity building of fishers organized in the last 2 years (2021-2022)

Country / Spec	Cook Islands	FSM	Fiji	Kiribati	Marshall Islands	Niue	Nauru	Palau	PNG	Samoa	Solomon Islands	Tonga	Tuvalu	Vanuatu
Safety	Yes	Yes							No	Yes	No		Yes	
Fishing methods	Yes	Yes							No	Yes	Yes		Yes	
Engine operation	No	Yes							No	No	No		Yes	
Fisheries Management	No	No							No	No	No		Yes	
Environmental protection	Yes	No							No	Yes	No		No	
Fish Handling	Yes	No							No	Yes	Yes		Yes	
Seamanship	No	No							No	No	No		Yes	
Business Planning	No	No							No	No	No		No	

Institutional Arrangements

Country	Cook Islands	FSM	Fiji	Kiribati	Marshall Islands	Niue	Nauru	Palau	PNG	Samoa	Solomon Islands	Tonga	Tuvalu	Vanuatu
How many officers	10	?							5	6	10		1	
Boat Builders on staff	No	No							No	No	No		No	
Planned boat building	No	No							Yes	No	No		Yes	
Min. Operate a boat yard	No	No							No	Yes	No		No	
Adequate storage space	No	?							Yes	No	No		No	
Are you Building a boat now	No	No							No	Yes	No		Yes	
Program to assist boat acquisition	No	?							Yes	Yes	No		Yes	
Loan		N/A							Yes	No	N/A		Yes	
Grant		N/A							Yes	Yes	N/A		No	
Subsidiz. Loan		N/A							Yes	Yes	N/A		No	
Commercial Bank		No							Yes	No	N/A		Yes	
Government		No							Yes	No	N/A		No	
Project		No							No	Yes			No	
Past Loan Program	No	No							Yes	No	Yes		No	
If yes what year		No							10 years	N/A	2009		N/A	
What are Interest rates	10.25-17.25%	N/A							4%	?	15%		?	

ANNEX IX. Terms of reference for consultants

Food and Agriculture organization of the United Nations
Terms of Reference for Consultant Category A *

Name:	TBA			
Job Title:	Consultant/Coordinator Fisheries economist			
Division/Department:	FAO SAP			
Programme/Activity Number:				
Duty Station:	Home Based with travel to Pacific countries			
Expected Start Date of Assignment:	ASAP	Duration:	32 months within 48 months activity implementation	
Reports to:	*Name:*	Lead Technical Officer SAP Sub-regional representative	NFIFO, Rome SAP, Apia	

General Description of task(s) and objectives to be achieved

Supervision:
The Consultant will work under the overall supervision of the FAO Sub-Regional Representative for the Pacific (SRC), the technical supervision of the Lead Technical Officer (LTO) and in close collaboration with the SAP Fisheries and Aquaculture Officer, and in collaboration and liaison with the Conservation International Coordinator and the Manager of the SPC Activity Management Unit of the Green Climate Fund regional tuna programme.

Background and General Context:
This activity is one of the components that will be implemented under the framework of the GCF regional tuna programme. The program is funded by the Green Climate Fund (GCF) and The Implementing Agency is Conservation International (CI), which is responsible for the overall implementation of the GCFRTP. The GCFRTP will be implemented in the West Central Pacific Ocean (WCPO) and has two major components working in tandem as follows: *Component A. Adaptations to harness tuna for food security of Pacific Island communities as coral reefs are degraded by climate change* and *Component B. Adaptations to reduce risks to Pacific Island economies of climate-driven redistribution of tuna.* The overall objective of the GCFRTP is to provide, knowledge, tools, policies, and actions for "Adapting tuna-dependent Pacific Island communities and economies to climate change". This activity "Design of energy saving fishing vessels for a-FADs fisheries" is set under Component A. and will be executed by The Food and Agriculture Organization of the United Nations (FAO) and will contribute synergistically to the overall objective and expected results of the GCFRTP. The GCFTP will be implemented for the benefit of 14 Pacific Small Island Developing States[15] (SIDS).

Tasks and Services:

[15] Cook Islands, Federated Stated of Micronesia, Fiji, Kiribati, Marshall Islands, Nieu, Nauru, Palau, Papua New Guinea, Samoa, Solomon Islands, Tonga, Tuvalu, Vanuatu

The consultant will undertake the following tasks and services in close coordination and cooperation and support from the FAO LTO, CI Coordinator, SPC Activity Management Unit:

- Prepare and modify as required Terms of Reference for consultants and coordinate their inputs.
- Coordinate with the LTO and SAP fisheries and aquaculture officer, data collection and studies to be prepared by national consultants.
- Coordinate with the FAO LTO and SAP fisheries and aquaculture officer the work planning and activities in the activity work plan;
- Organize, coordinate and plan activity meetings and workshops in coordination with the FAO Team and Task force and the CI Coordinator and SPC including: the activity inception meeting, presentation of the vessel designs, vessel construction and vessel full scale trials.
- Prepare reports and documents in accordance with the activity work plan and with the meetings and workshops including but not limited to Letters of Agreement and drafting of contracts.
- Work with National Consultants to collect technical and economic and financial data on the fisheries and prepare reports leading to the preparation of a fishing vessel catalogue of FAD fishing vessels being used in the participating countries.
- Undertake cost and benefit analyses and activities for prototype vessels.
- Organize surveys with national consultants and international finance and insurance experts leading to the preparation of recommendations, policies and guidance related to appropriate and innovative financing and insurance instruments.
- Organize in close collaboration with the FAO, CI, participating countries a regional fisheries finance and insurance workshop with Pacific SIDS to present and discuss the findings of the various studies.
- Any other duties that may be required by the FAO LTO officer and/or SAP Fisheries and aquaculture officer.

KEY QUALIFICATIONS

The Candidate should have the following knowledge and qualifications.

- Advanced university degree in Fisheries economics and financing Economics or another relevant field.
- 5 - 7 years working experience in the fisheries sector
- Experience in coordination and activity management
- Experience in preparing cost and earnings evaluation of fishing vessels.
- Ability to prepare concise reports according to United Nations standards and donor requirements.
- Excellent oral and written skills in English.
- Availability to travel frequently to the activity countries.
- Excellent knowledge of English.
- Experience working with FAO systems would be an asset.

Key performance indicators

Expected Outputs:	Required Completion Date:
Inception report including detailed workplan for consultancy 6 monthly progress reports Cost Benefit Analyses/techno-economic performance review of fishing vessels Mission/travel reports Workshop reports (as required) End of assignment Report	TBA

Name:	TBA			
Job Title:	Naval Architect			
Division/Department:	FAO SAP			
Programme/Activity Number:				
Duty Station:	Home Based with travel to Pacific countries			
Expected Start Date of Assignment:	ASAP	Duration:	7 months (when actually employed) within 48 months	
Reports to:	Name:	Lead Technical Officer	NFIFO, Rome	

General Description of task(s) and objectives to be achieved

Supervision:

The Consultant will work under the overall supervision of the FAO Sub-Regional Representative for the Pacific (SRC), the technical supervision of the Lead Technical Officer (LTO) and in close collaboration with the SAP Fisheries and Aquaculture Officer, and in collaboration and liaison with the Conservation International Coordinator and the Manager of the SPC Activity Management Unit of the Green Climate Fund regional tuna programme..

Background and General Context:

This activity is one of the components that will be implemented under the framework of the GCF regional tuna programme. The program is funded by the Green Climate Fund (GCF) and The Implementing Agency is Conservation International (CI), which is responsible for the overall implementation of the GCFRTP. The GCFRTP will be implemented in the West Central Pacific Ocean (WCPO) and has two major components working in tandem as follows: *Component A. Adaptations to harness tuna for food security of Pacific Island communities as coral reefs are degraded by climate change* and *Component B. Adaptations to reduce risks to Pacific Island economies of climate-driven redistribution of tuna.* The overall objective of the GCFRTP is to provide, knowledge, tools, policies, and actions for "Adapting tuna-dependent Pacific Island communities and economies to climate change". This activity "Design of energy saving fishing vessels for a-FADs fisheries" is set under Component A. and will be executed by The Food and Agriculture Organization of the United Nations (FAO) and will contribute synergistically to the overall objective and expected results of the GCFRTP. The GCFTP will be implemented for the benefit of 14 Pacific Small Island Developing States[16] (SIDS).

Tasks and Services:

The consultant will undertake the following tasks and services in close coordination and cooperation and support from the FAO LTO, CI Coordinator, SPC Activity Management Unit:

- Coordinate with the Activity LTO, Coordinator / Economist, Activity Task Force, CI Coordinator and SPC all the work and activities and update them on progress as needed/requested.
- Coordinate, technical surveys of existing FAD fishing vessels and assist in the identification of common attributes and technical specification s that can be used to develop the most appropriate FAD fishing vessel designs.
- Participate in the workshops and meetings where the designs, construction, full scale test of the vessels and financing options will be presented to participating countries, banks and development partners.
- Contribute to various workshops and meetings during the lifespan of the activity.

[16] Cook Islands, Federated Stated of Micronesia, Fiji, Kiribati, Marshall Islands, Nieu, Nauru, Palau, Papua New Guinea, Samoa, Solomon Islands, Tonga, Tuvalu, Vanuatu

- Travel to most of the participating countries, conduct consultations with stakeholders, update information and understand the needs of the fishers in participating countries.
- Prepare 2 main vessel designs (1 for a multi-day fishing vessel and 1 for a day fishing vessel) with 3 different size lengths for each of the designs.
- Coordinate with a towing tank facility to ensure that the designs are fully stable sea going and that the power requirements will be adequate for all the conditions that the designs are likely to encounter in the participating countries.
- Prepare the complete technical specifications for each of the 6 models. The specifications should be ready for tender to a boat building company to construct 2 vessels 1 multi day vessel and 1 day-fishing vessel. The exact sizes of the day vessels will be determined based on the survey carried out in each country and at a meeting when the designs will be presented.
- Assist the LTO in the preparation of the construction contracts.
- Inspect vessels during their construction to ensure compliance with the safety and specifications.
- Participate in the sea trials and hand over the boats from the boat construction company to FAO (as needed)
- Provide technical advice on an ongoing basis to the construction, full scale testing and policy discussions at the end of the activity.
- Any other duties that may be required by the FAO LTO officer

KEY QUALIFICATIONS

The Candidate should have the following knowledge and qualifications.

- A Degree in naval architecture
- Over 10 years continuous experience in the design of small-scale Fishing Vessels less than 18 metres.
- Experience in the Pacific SIDS in matters related to designs and testing of fishing vessels
- Excellent oral and written skills in English.
- Availability to travel frequently to the activity countries.
- Excellent knowledge of English.
- Experience working with FAO systems would be an asset.

Key performance indicators

Expected Outputs:	Required Completion Date:
Report on the common attributes for 2 vessel designs in 3 different size lengths Full technical drawings and specifications for construction of 2 vessels Travel/mission reports Inspection reports Sea trial report End of assignment report	TBA

Name:	TBA			
Job Title:	Maritime Lawyer			
Division/Department:	FAO SAP			
Programme/Activity Number:				
Duty Station:	Home Based with travel to Pacific countries			
Expected Start Date of Assignment:			Duration:	1.5 months (When actually employed)
Reports to:	*Name:*	Lead Technical Officer Chief LEGN	NFIFO, Rome LEGN, Rome	

General Description of task(s) and objectives to be achieved

Supervision:

The Consultant will work under the overall supervision of the FAO Sub-Regional Representative for the Pacific (SRC), the technical supervision of the Lead Technical Officer (LTO) and the Chief Development Law Service (LEGN) in close collaboration with the SAP Fisheries and Aquaculture Officer, and in collaboration and liaison with the Conservation International Coordinator and the Manager of the SPC Activity Management Unit of the Green Climate Fund regional tuna programme.

Background and General Context:

This activity is one of the components that will be implemented under the framework of the GCF regional tuna programme. The program is funded by the Green Climate Fund (GCF) and The Implementing Agency is Conservation International (CI), which is responsible for the overall implementation of the GCFRTP. The GCFRTP will be implemented in the West Central Pacific Ocean (WCPO) and has two major components working in tandem as follows: *Component A. Adaptations to harness tuna for food security of Pacific Island communities as coral reefs are degraded by climate change* and *Component B. Adaptations to reduce risks to Pacific Island economies of climate-driven redistribution of tuna.* The overall objective of the GCFRTP is to provide, knowledge, tools, policies, and actions for "Adapting tuna-dependent Pacific Island communities and economies to climate change". This activity "Design of energy saving fishing vessels for a-FADs fisheries" is set under Component A. and will be executed by The Food and Agriculture Organization of the United Nations (FAO) and will contribute synergistically to the overall objective and expected results of the GCFRTP. The GCFTP will be implemented for the benefit of 14 Pacific Small Island Developing States[17] (SIDS).

Tasks and Services:

The consultant will undertake the following tasks and services in close coordination and cooperation and support from the FAO LTO, CI Coordinator, SPC Activity Management Unit:

- Coordinate with the Activity LTO, Coordinator / Economist, Activity Task Force, CI Coordinator and SPC all the work and activities and update them on progress as needed/requested.
- Conduct a desk review of the legislation in most participating countries in relation to safety of small-scale fishing vessel including vessels that will navigate on multiday fishing trips.
- Prepare a GAP analysis.
- Working in close collaboration with the FAO Development Law Service (LEGN) and FAO NFIFO Fishing Safety Officer, prepare draft fishing vessel safety regulations and

[17] Cook Islands, Federated Stated of Micronesia, Fiji, Kiribati, Marshall Islands, Nieu, Nauru, Palau, Papua New Guinea, Samoa, Solomon Islands, Tonga, Tuvalu, Vanuatu

accompanying explanatory notes for various types/sizes of fishing vessels, for incorporation in national level legislation of the Pacific SIDS. • Prepare a final report. • Any other duties that may be required by the FAO LTO officer	
KEY QUALIFICATIONS	
The Candidate should have the following knowledge and qualifications. • A Law Degree with specialisation in maritime or fisheries issues • Over 5 years-experience in maritime/fisheries laws • Experience in safety of fishing operations will be an asset particularly if it included safety of fishing vessels or smaller sea going vessels. • Experience in drafting fisheries and safety regulations. • Experience in the Pacific SIDS in matters related to fisheries laws • Excellent oral and written skills in English. • Availability to travel frequently to the activity countries. • Excellent knowledge of English. • Experience working with FAO systems would be an asset.	
Key performance indicators	
Expected Outputs:	Required Completion Date:
GAP analysis of safety regulation for smaller fishing vessels Generic Safety Regulations for small fishing vessels Travel/mission reports End of assignment report	TBA

Name:	TBA			
Job Title:	National Consultant on data collection and coordination			
Division/Department:	FAO SAP			
Programme/Activity Number:				
Duty Station:	Home Based with travel to Pacific countries			
Expected Start Date of Assignment:			Duration:	1 month per year (4 months in total – when actually employed- within 48 months)
Reports to:	*Name:*	Lead Technical Officer SAP Subregional representative	NFIFO, Rome SAP, Apia	

General Description of task(s) and objectives to be achieved

Supervision:

The Consultant will work under the overall supervision of the FAO Sub-Regional Representative for the Pacific (SRC), the technical supervision of the Lead Technical Officer (LTO) and in close collaboration with the SAP Fisheries and Aquaculture Officer, and in collaboration and liaison with the Conservation International Coordinator and the Manager of the SPC Activity Management Unit of the Green Climate Fund Regional Tuna Programme..

Background and General Context:

This activity is one of the components that will be implemented under the framework of the GCF regional tuna programme. The program is funded by the Green Climate Fund (GCF) and The Implementing Agency is Conservation International (CI), which is responsible for the overall implementation of the GCFRTP. The GCFRTP will be implemented in the West Central Pacific Ocean (WCPO) and has two major components working in tandem as follows: *Component A. Adaptations to harness tuna for food security of Pacific Island communities as coral reefs are degraded by climate change* and *Component B. Adaptations to reduce risks to Pacific Island economies of climate-driven redistribution of tuna.* The overall objective of the GCFRTP is to provide, knowledge, tools, policies, and actions for "Adapting tuna-dependent Pacific Island communities and economies to climate change". This activity "Design of energy saving fishing vessels for a-FADs fisheries" is set under Component A. and will be executed by The Food and Agriculture Organization of the United Nations (FAO) and will contribute synergistically to the overall objective and expected results of the GCFRTP. The GCFTP will be implemented for the benefit of 14 Pacific Small Island Developing States[18] (SIDS).

Tasks and Services:

The consultant will undertake the following tasks and services in close coordination and cooperation and support from the FAO LTO, CI Coordinator, SPC Activity Management Unit:

- Coordinate with the Coordinator Economist, FAO LTO, Naval Architect and SPC focal points to collect data on the technical attributes of vessels in country and economic and financial data from banks, insurance companies and funding of fishing vessels your country
- Prepare the data collected according to the format required by the activity
- Any other duties that may be required by the FAO LTO officer

KEY QUALIFICATIONS

The Candidate should have the following knowledge and qualifications

[18] Cook Islands, Federated Stated of Micronesia, Fiji, Kiribati, Marshall Islands, Nieu, Nauru, Palau, Papua New Guinea, Samoa, Solomon Islands, Tonga, Tuvalu, Vanuatu

• University degree at bachelor's level. • Minimum of 2 years' working experience in the fisheries sector or as economist • Experience in conducting surveys and research • Ability to prepare concise reports according to United Nations standards. • Excellent oral and written skills in English. • Availability to travel frequently within the national country. • Excellent knowledge of English. • Experience working with FAO systems would be an asset.	
Key performance indicators	
Expected Outputs:	Required Completion Date:
Inception report including detailed workplan for the consultancy. Short monthly reports Cost Benefit Analyses of selected national fishing vessels Workshop reports (as required) End of assignment report	TBA

Name:	TBA			
Job Title:	Master Fisherman			
Division/Department:	FAO SAP			
Programme/Activity Number:				
Duty Station:	Home Based with travel to Pacific countries			
Expected Start Date of Assignment:			Duration:	9 months (when actually employed)
Reports to:	*Name:*	Lead Technical Officer SAP Fishery and aquaculture officer	NFIFO, Rome SAP, Apia	

General Description of task(s) and objectives to be achieved

Supervision:
The Consultant will work under the overall supervision of the FAO Sub-Regional Representative for the Pacific (SRC), the technical supervision of the Lead Technical Officer (LTO) and in close collaboration with the SAP Fisheries and Aquaculture Officer, and in collaboration and liaison with the Conservation International Coordinator and the Manager of the SPC Activity Management Unit of the Green Climate Fund Regional Tuna Programme.

Background and General Context:
This activity is one of the components that will be implemented under the framework of the GCF regional tuna Programme. The program is funded by the Green Climate Fund (GCF) and The Implementing Agency is Conservation International (CI), which is responsible for the overall implementation of the GCFRTP. The GCFRTP will be implemented in the West Central Pacific Ocean (WCPO) and has two major components working in tandem as follows: *Component A. Adaptations to harness tuna for food security of Pacific Island communities as coral reefs are degraded by climate change* and *Component B. Adaptations to reduce risks to Pacific Island economies of climate-driven redistribution of tuna.* The overall objective of the GCFRTP is to provide, knowledge, tools, policies, and actions for "Adapting tuna-dependent Pacific Island communities and economies to climate change". This activity "Design of energy saving fishing vessels for a-FADs fisheries" is set under Component A. and will be executed by The Food and Agriculture Organization of the United Nations (FAO) and will contribute synergistically to the overall objective and expected results of the GCFRTP. The GCFTP will be implemented for the benefit of 14 Pacific Small Island Developing States[19] (SIDS).

Tasks and Services:
The consultant will undertake the following tasks and services in close coordination and cooperation and support from the FAO LTO, CI Coordinator, SPC Activity Management Unit:

- Participate in planning workshops and meetings and prepare presentation related to the technical attributes of FAD fishing vessels.
- Contribute and review the survey carried out by national consultants.
- Contribute to the preparation of the specifications on fishing vessels designs for multi day and day boats.
- Inspect vessels during their construction.
- Coordinate with the FAO LTO and Coordinator/Economist and Naval Architect in matter related to coordination with the Departments of Fisheries, Boatyard, other consultants and fishers and the company that will conduct the full-scale trials of the prototype vessel.

[19] Cook Islands, Federated Stated of Micronesia, Fiji, Kiribati, Marshall Islands, Nieu, Nauru, Palau, Papua New Guinea, Samoa, Solomon Islands, Tonga, Tuvalu, Vanuatu

- Participate in fishing for tuna around FADs during the full-scale testing of the vessels.
- Prepare reports, presentations and analyses as required.
- Any other duties that may be required by the FAO LTO officer

KEY QUALIFICATIONS

The Candidate should have the following knowledge and qualifications.

- Fishing Skipper License
- Ability to prepare concise reports according to United Nations standards and donor requirements.
- Excellent oral and written skills in English.
- Availability to travel frequently to the activity countries.
- Excellent knowledge of English.
- Experience working with FAO systems would be an asset.

Key performance indicators

Expected Outputs:	Required Completion Date:
Quarterly reports Inspection reports Fishing Trial reports End of assignment report	TBA

Name:	TBA			
Job Title:	Financial / Insurance Services Expert			
Division/Department:	FAO SAP			
Programme/Activity Number:				
Duty Station:	Home Based with travel to Pacific countries			
Expected Start Date of Assignment:			Duration:	1.5 months (when actually employed)
Reports to:	*Name:*	Lead Technical Officer	NFIFO, Rome	

General Description of task(s) and objectives to be achieved

Supervision:

The Consultant will work under the overall supervision of the FAO Sub-Regional Representative for the Pacific (SRC), the technical supervision of the Lead Technical Officer (LTO) and in close collaboration with the SAP Fisheries and Aquaculture Officer, and in collaboration and liaison with the Conservation International Coordinator and the Manager of the SPC Activity Management Unit of the Green Climate Fund regional tuna programme.

Background and General Context:

This activity is one of the components that will be implemented under the framework of the GCF regional tuna program. The program is funded by the Green Climate Fund (GCF) and The Implementing Agency is Conservation International (CI), which is responsible for the overall implementation of the GCFRTP. The GCFRTP will be implemented in the West Central Pacific Ocean (WCPO) and has two major components working in tandem as follows: *Component A. Adaptations to harness tuna for food security of Pacific Island communities as coral reefs are degraded by climate change* and *Component B. Adaptations to reduce risks to Pacific Island economies of climate-driven redistribution of tuna.* The overall objective of the GCFRTP is to provide, knowledge, tools, policies, and actions for "Adapting tuna-dependent Pacific Island communities and economies to climate change". This activity "Design of energy saving fishing vessels for A-FADs fisheries" is set under Component A. and will be executed by The Food and Agriculture Organization of the United Nations (FAO) and will contribute synergistically to the overall objective and expected results of the GCFRTP. The GCFTP will be implemented for the benefit of 14 Pacific Small Island Developing States[20] (SIDS).

Tasks and Services:

The consultant will undertake the following tasks and services in close coordination and cooperation and support from the FAO LTO, CI Coordinator, SPC Activity Management Unit:

- Desk review of activity and other documents and studies related to the financial sector in Pacific SIDS
- Prepare surveys to gather information on financial and insurance services in Pacific SIDS. The information will be gathered by national consultants.
- Analyse the survey results and make recommendations related to innovative financial and insurance instruments adaptable to the context of Pacific SIDS.
- Participate in the organization and planning of workshops and meetings and prepare presentations.
- Contribute to the preparation of the workshop report on financing and insurance. The workshop will be a face to face not virtual meeting.
- Any other duties that may be required by the FAO LTO officer

[20] Cook Islands, Federated Stated of Micronesia, Fiji, Kiribati, Marshall Islands, Nieu, Nauru, Palau, Papua New Guinea, Samoa, Solomon Islands, Tonga, Tuvalu, Vanuatu

KEY QUALIFICATIONS	
The Candidate should have the following knowledge and qualifications. • Advanced Degree in finance /economics • 10 years' experience in rural finance and insurance internationally • Experience in developing innovative financial and insurance instruments. • Proven track record in finance • Experience in Pacific SIDS will be an asset. • Ability to prepare concise reports according to United Nations standards and donor requirements. • Excellent oral and written skills in English. • Availability to travel attend meetings and workshop. • Excellent knowledge of English. • Experience working with FAO systems would be an asset.	
Key performance indicators	
Expected Outputs:	Required Completion Date:
Survey methodology and contents Survey Analysis report Presentation on innovative financial and insurance instruments End of assignment report	TBA